Street Construction Notes

1. All public streets shall be constructed in accordance with the latest edition of the Washington State Department of Transportation Standard Specifications for Road, Bridge, and Municipal Construction and the City of Longview Standard Plans and Specifications.
2. Material in soft spots within the roadway shall be remove to the depth required to provide a firm foundation and shall be thoroughly compacted to a relative density of 95% of optimum. The maximum allowable rock size is 4 inches. Work shall be consistent with the standard specifications section 2-06.
3. New curbs shall be marked with "S" for sewer, "W" for water and "D" for storm sewer drain wherever a water, sewer or storm crosses under the curb.
4. All public street construction is subject to inspection and approval by the City Department of Public Works. The Contractor shall notify the City a minimum of two full working days prior to the start of any construction.
5. The Contractor shall be responsible for determining the location of all underground utilities prior to the start of construction/excavation and shall notify the engineer of any potential conflicts. The Contractor is required to contact the **Northwest Utility Notification Center** a minimum of two full business days prior to the start of construction and/or any excavation at **811 or www.callbeforeyoudig.org**.
6. As-built drawings shall be submitted and approved prior to project acceptance.
7. Any contractor caused damage to City streets, sidewalks or City infrastructure shall be repaired or replaced to the satisfaction of the City at the sole expense of the Contractor.

The City of Longview Washington	**STREET GENERAL NOTES**	
	STANDARD PLAN: **ST - 000**	CITY ENGINEER APPROVAL: Longview: **C.B.**
	DATE: **JAN 2017**	

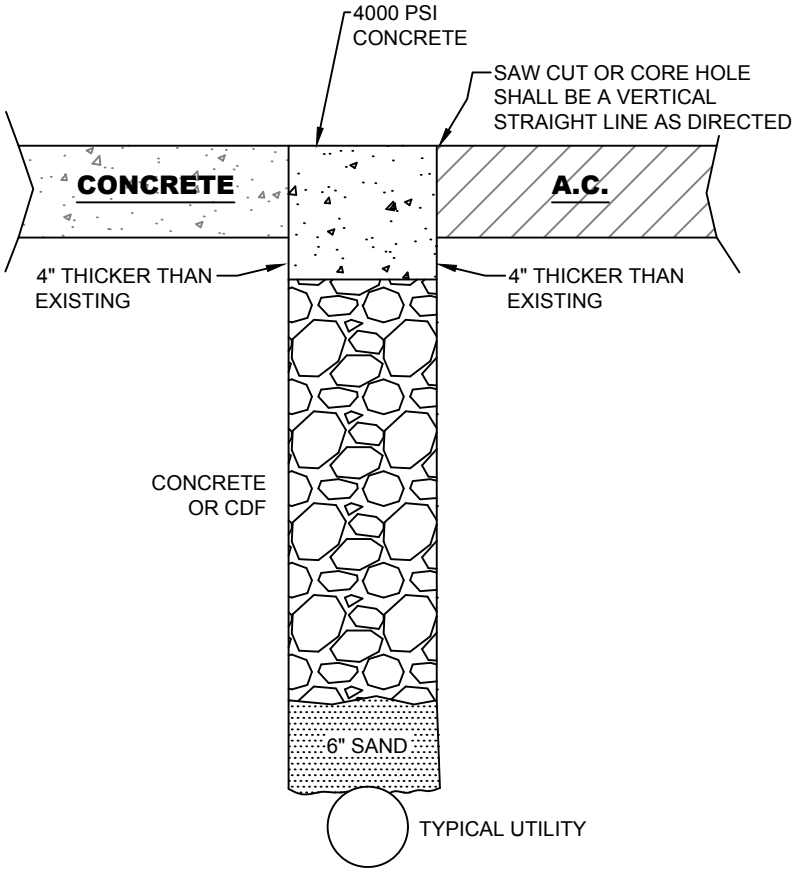

NOTES:

1. IF UNDERMINING OF PAVEMENT OCCURS, CUTTING BACK HARD SURFACE BEYOND SLUFFING REQUIRED TO OBTAIN PROPER COMPACTION.
2. CONCRETE OR CDF BACKFILL SHALL BE HAND TAMPED.

The City of Longview Washington	**EXPLORITORY CORE REPAIR**	
	STANDARD PLAN: **ST - 005**	CITY ENGINEER APPROVAL: Longview: **C.B.**
	DATE: **JAN 2017**	

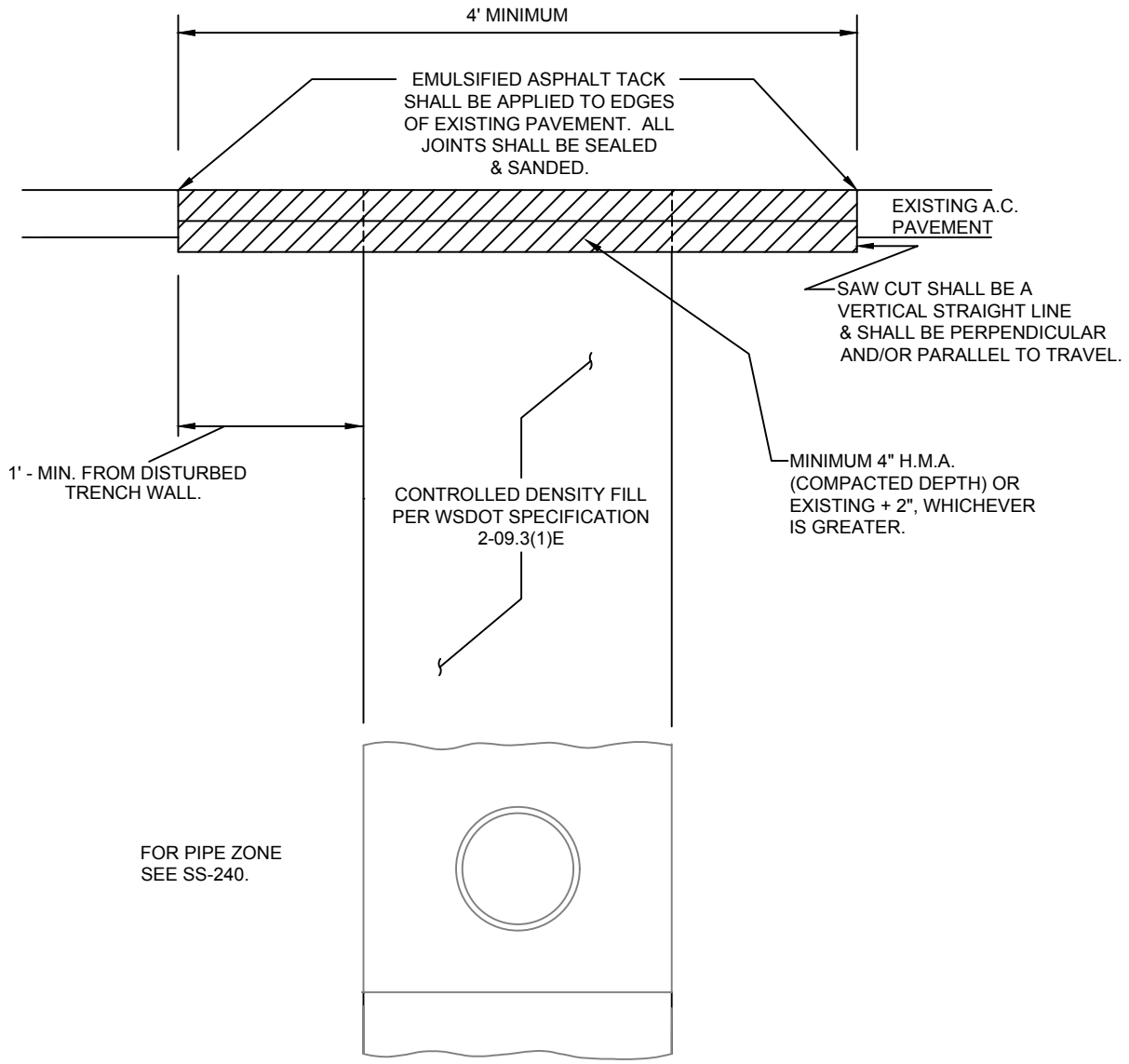

NOTES:

1. ALL TEMP COLD PATCHING TO BE 1-1/2" MINIMUM DEPTH.
2. CDF MUST CURE FOR A MINIMUM OF 48 HOURS PRIOR TO PAVING OR USE COMPACTABLE CDF.
3. TRENCH SHALL BE PLATED UNTIL CDF IS CURED FOR TEMP OR PERMANENT PATCH.
4. PLATE TO BE PINNED & COLD MIXED, OR SECURED BY METHOD APPROVED BY ENGINEER.

The City of Longview Washington	**ASPHALT ARTERIAL TRENCH RESTORATION**	
	STANDARD PLAN: **ST - 010**	CITY ENGINEER APPROVAL: Longview: **C.B.**
	DATE: **JAN 2017**	

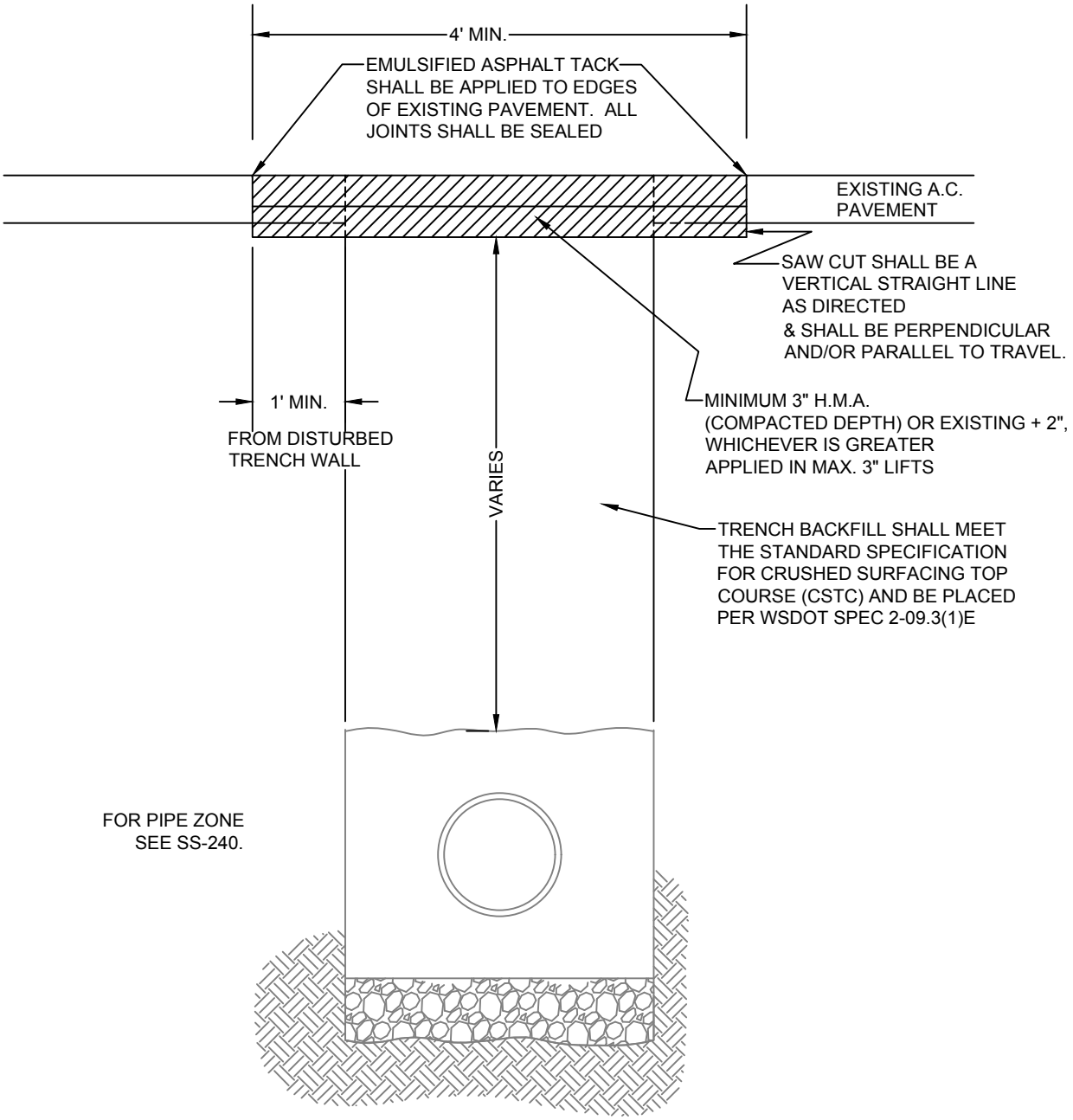

NOTES:

1. ALL MATERIALS EXCEPT A.C.P. AND BEDDING MATERIAL SHALL BE COMPACTED IN 6-INCH MAXIMUM LIFTS TO 95% DENSITY AS DETERMINED BY ASTM D1557.
2. TRENCH SHALL BE PLATED OR CAPPED WITH COLD MIX UNTIL PAVED.
3. PLATE TO BE PINNED & COLD MIXED, OR SECURED BY METHOD APPROVED BY ENGINEER.

The City of Longview Washington	**ASPHALT TRENCH RESTORATION**	
	STANDARD PLAN: **ST - 020**	CITY ENGINEER APPROVAL: Longview: **C.B.**
	DATE: **JAN 2017**	

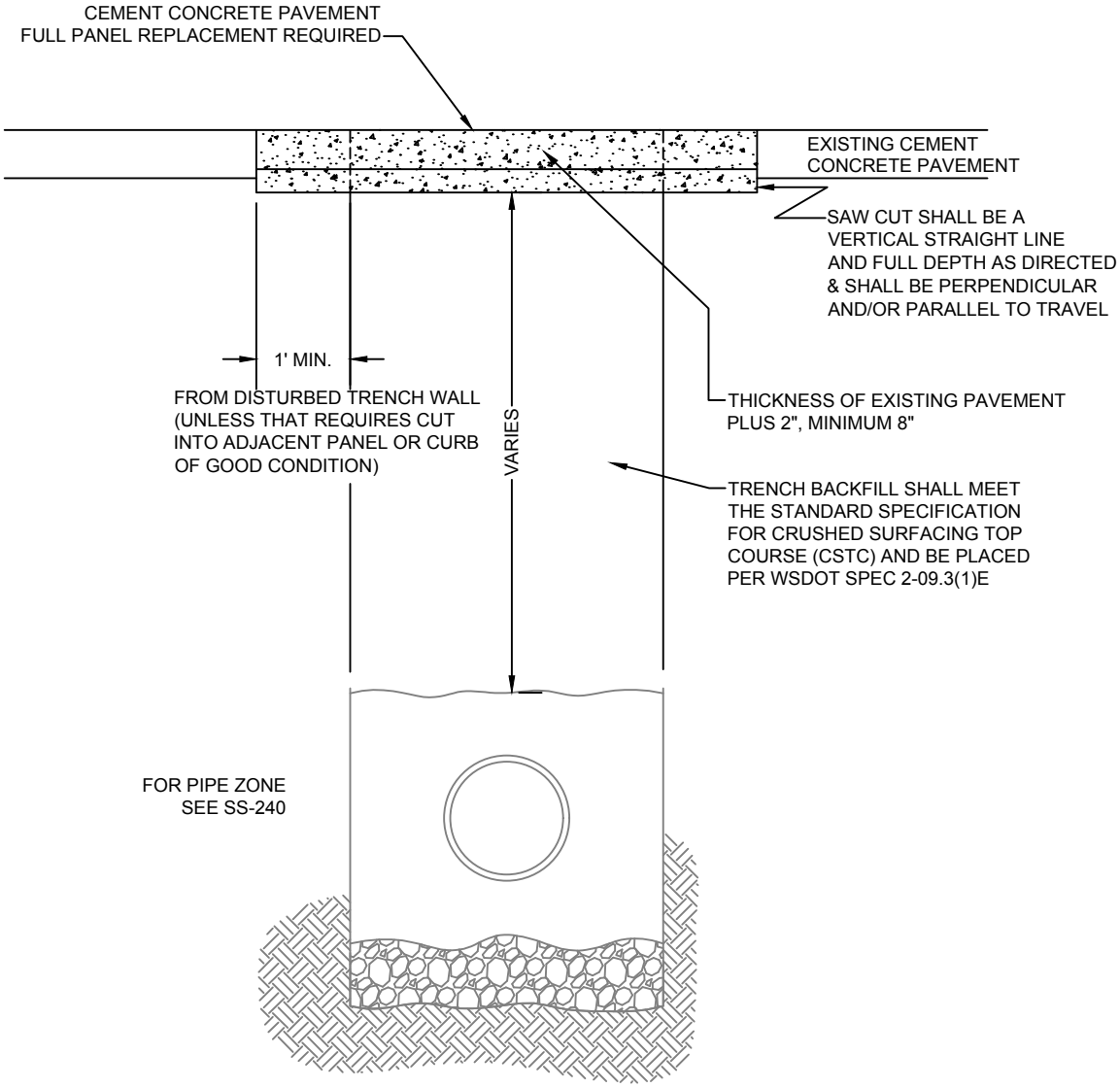

NOTES:

1. ALL MATERIALS EXCEPT CONCRETE AND BEDDING MATERIAL SHALL BE COMPACTED IN 6-INCH MAXIMUM LIFTS TO 95% DENSITY AS DETERMINED BY ASTM D1557.
2. TRENCH SHALL BE PLATED OR CAPPED WITH ASPHALT UNTIL PAVED. OPTION: "UNTIL FINAL RESTORATION"
3. PLATE TO BE DRILLED, PINNED & COLD MIXED, OR SECURED BY METHOD APPROVED BY ENGINEER.
4. SPALLED OR DAMAGED CONCRETE SHALL BE RE-SAWN AND REPLACED TO LIMITS DIRECTED BY ENGINEER.
5. UNDER CERTAIN CONDITIONS, HALF PANEL REPLACEMENT MAY BE ALLOWED, AS APPROVED BY THE CITY ENGINEER.

The City of Longview Washington	**CONCRETE TRENCH RESTORATION**	
	STANDARD PLAN: **ST - 030**	CITY ENGINEER APPROVAL: Longview: **C.B.**
	DATE: **JAN 2017**	

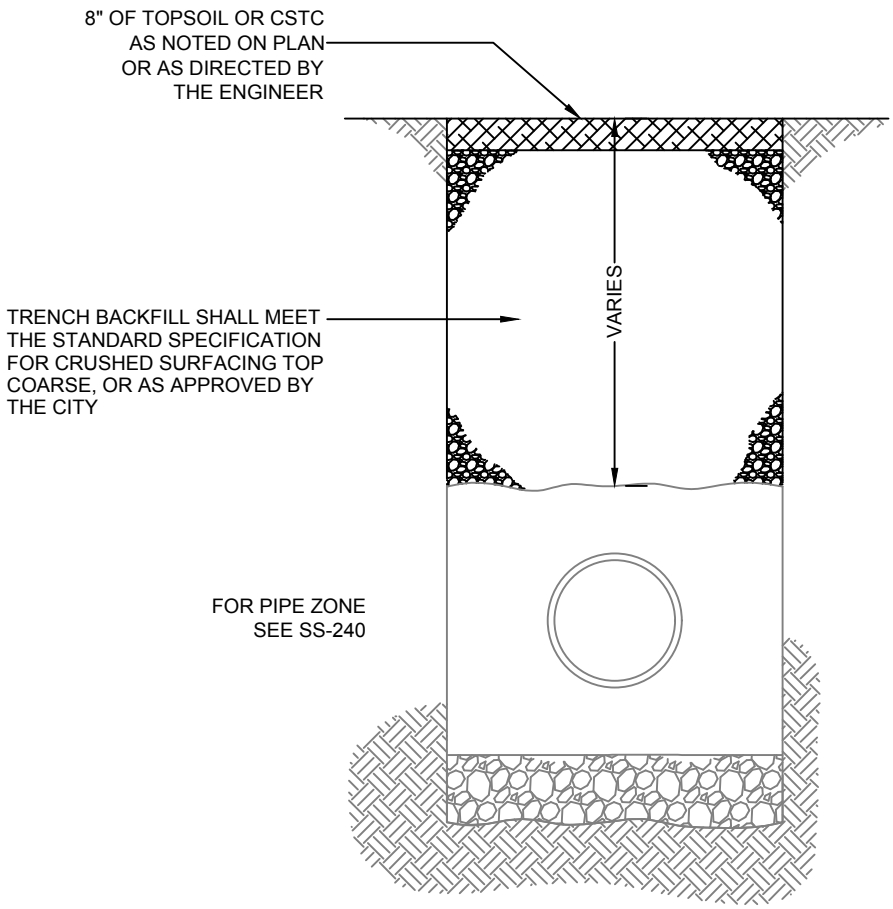

The City of Longview Washington	**TRENCH RESTORATION FOR UNPAVED AREAS**	
	STANDARD PLAN: **ST - 040**	CITY ENGINEER APPROVAL: Longview: **C.B.**
	DATE: **JAN 2017**	

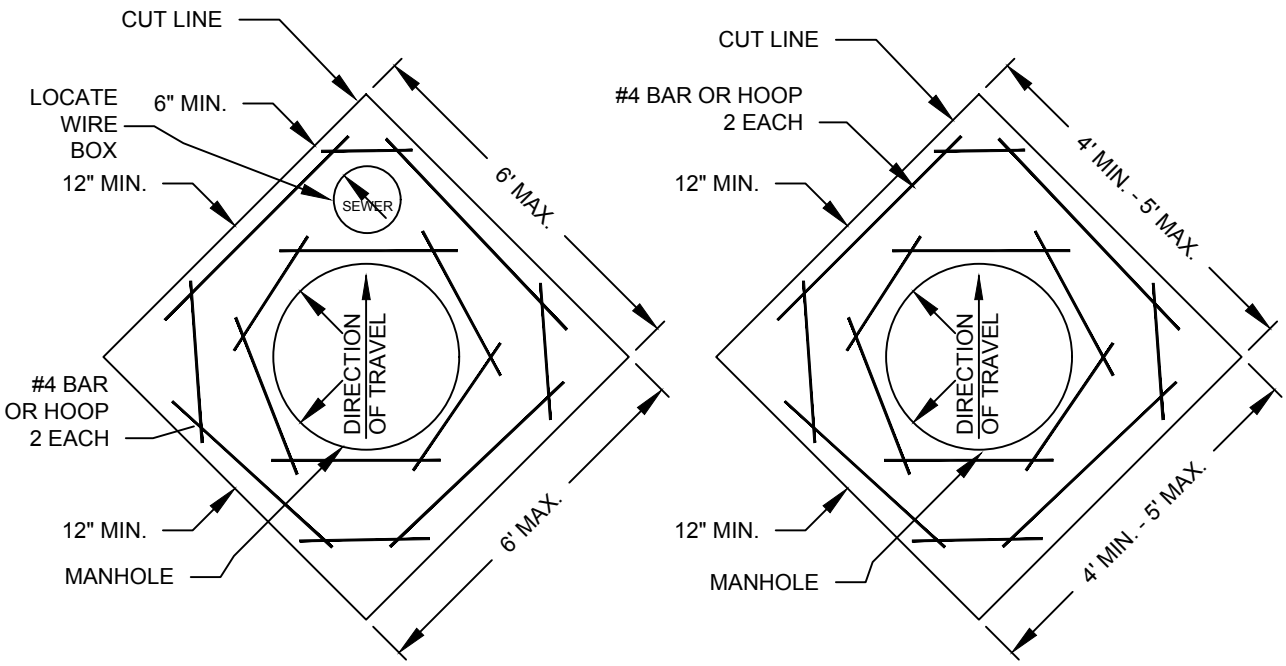

WITH LOCATE WIRE BOX

PLAN

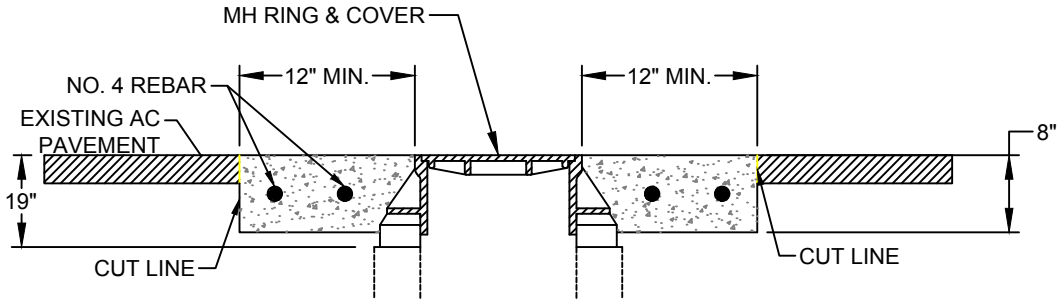

SECTION

NOTES:

1. COVER MANHOLE WITH BUILDING PAPER AND CONST. ASPHALT CONCRETE BASE COURSE AND WEARING COURSES.
2. SAW SQUARE AROUND MANHOLE 12" MIN. FROM MANHOLE FRAME.
3. RAISE MANHOLE FRAME AND COVER TO FINISH GRADE BY INSTALLING CONCRETE RINGS AND LEVELING MORTAR.
4. BACKFILL WITH EARLY STRENTH P.C. CONCRETE TO FINISH GRADE.
5. PROTECT FROM TRAFFIC LOADING UNTIL CONCRETE HAS CURED TO 80% OF DESIGN STRENGTH.
6. APPLY TACK COAT TO EDGES OF EXISTING PAVEMENT BEFORE INSTALLING PATCH.
7. FINISH JOINT WITH ASPHALT SEAL AND SAND.
8. MAXIMUM GRADE ADJUSTMENT IS 19" FROM CASTING TO TOP OF CONE.
9. CONCRETE SHALL BE CLASS 4000 COMMERCIAL.
10. COLLARS ARE REQUIRED FOR ALL PAVED TRAVEL WAYS.

The City of Longview Washington	CONCRETE COLLAR	
	STANDARD PLAN: **ST-050**	CITY ENGINEER APPROVAL: Longview: **C.B.**
	DATE: **JAN 2017**	

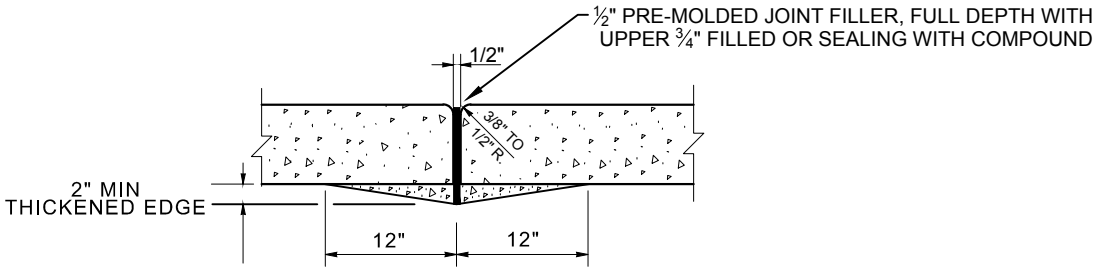

EXPANSION JOINT

USE AGAINST EXISTING PAVEMENT, AT POINTS OF TANGENCY AT "CONSTRUCTION JOINTS" (I.E. WHERE PLACING OF CONCRETE HAS BEEN DISRUPTED FOR MORE THAN 45 MINUTES OR ABUTS REINFORCED CONCRETE BRIDGE APPROACH SLABS), WHERE DRAINAGE FEATURES ARE PLACED (I.E. "ISOLATION JOINTS",SEE ST–070). EVERY 45' FOR NEW CONSTRUCTION. JOINT SPACING MAY BE GREATER AS APPROVED BY THE CITY ENGINEER, BUT SHALL USE 3/4" PRE–MOLDED FILLER AND IN NO CASE SHALL EXPANSION JOINTS BE MORE THAN 100' APART.

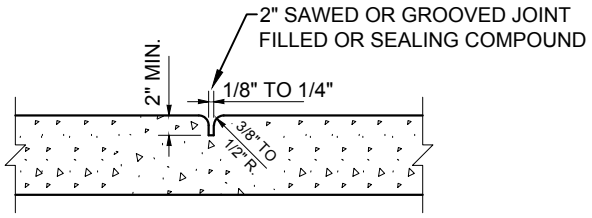

CONTRACTION JOINT

USE BETWEEN EXPANSION JOINTS AND NOT MORE THAN 15' APART

8"	5"
D	D/2 - 1"

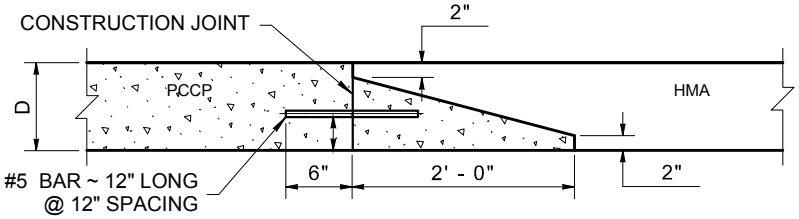

IMPACT PANEL

USE FOR NEW CONSTRUCTION CONCRETE TRANSITIONS TO ASPHALT

1. JOINTS SHALL CONFORM TO WSDOT STANDARD SPECS SECTIION 5-05(8).
2. JOINT MATERIAL SHALL CONFORM TO WSDOT STANDARD SPECS SECTIONS 9-04.1 & 9-04.2.
3. GEOTEXTILE (OR OTHER BOND-BREAKING MATERIAL APPROVED BY THE CITY ENGINEER) IS ALLOWED FOR LONGITUDINAL JOINTS ALONG EXISTING PAVEMENT IN LIEU OF PRE-MOLDED FILLER MATERIAL. GEOTEXTILE SHALL BE NON-WOVEN FABRIC 6oz PER S.Y. MIN PER WSDOT STANDARD SPECS.
4. ALL JOINTS SHALL BE CLEAN, AND IN THE GUTTER THEY SHALL BE EDGED.

The City of Longview Washington

JOINTS FOR NON-ARTERIAL TRAFFIC BEARING CONCRETE PAVEMENTS

STANDARD PLAN: **ST - 060**

DATE: **JAN 2017**

CITY ENGINEER APPROVAL:

Longview: **C.B.**

NO. 1 FOR MANHOLE BLOCKOUT

USE FOUR #5 BARS - LENGTH EQUAL TO BLOCKOUT PLUS 1-½ FEET

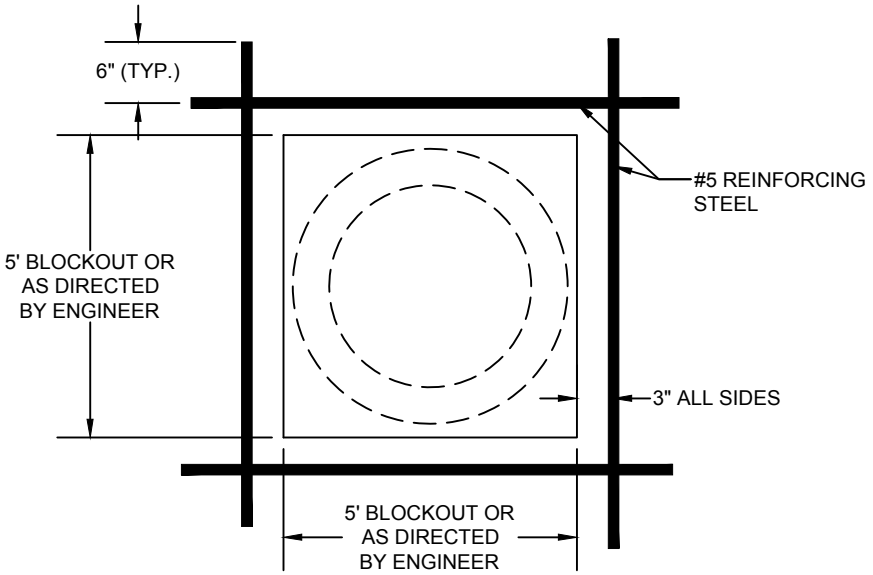

NO. 2 FOR CATCH BASIN BLOCKOUT

USE TWO #5 BARS - 3'-6" LONG
USE ONE #5 BAR - 6'-6" LONG

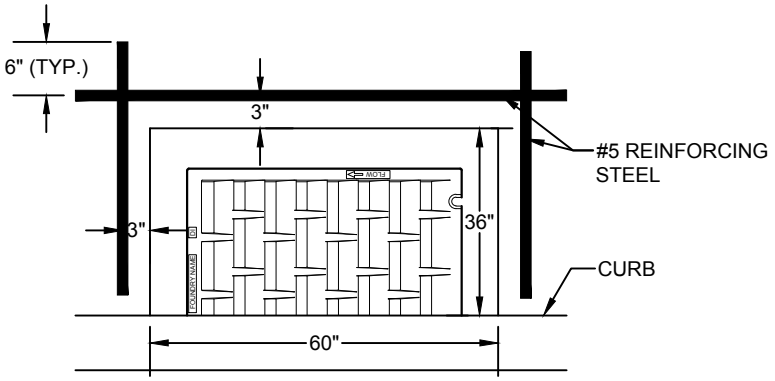

NO. 3 FOR CATCH BASIN WITH CURB INLET

USE TWO #5 BARS - 3'-6" LONG
USE ONE #5 BAR - 6'-6" LONG

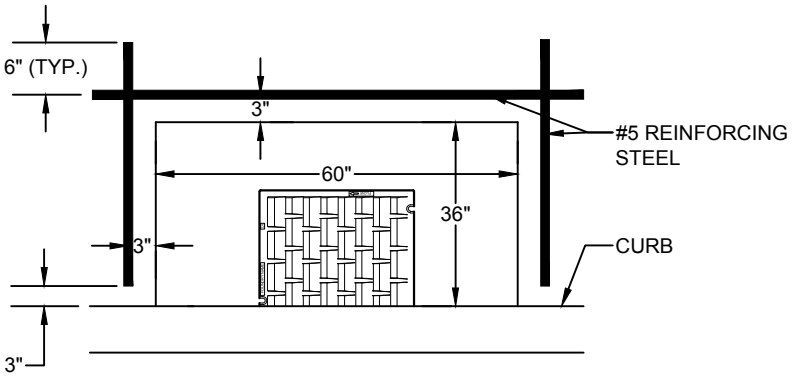

NOTES:

1. PLACE ALL REBAR TO HAVE 2" CLEARANCE FROM BOTTOM OF SLAB
2. PLACE 3/4" FULL DEPTH EXPANSION JOINT MATERIAL ON ALL SIDES OF BLOCK OUT
3. CEMENT CONCRETE SHALL BE CL 4000, 3 DAY MIX
4. SEE WSDOT STANDARD PLAN A40.15-00 FOR ADDITIONAL OPTIONS

The City of Longview Washington	**CONCRETE STREET BLOCKOUTS "ISOLATION JOINTS"**	
	STANDARD PLAN: **ST - 070**	CITY ENGINEER APPROVAL: Longview: **C.B.**
	DATE: **JAN 2017**	

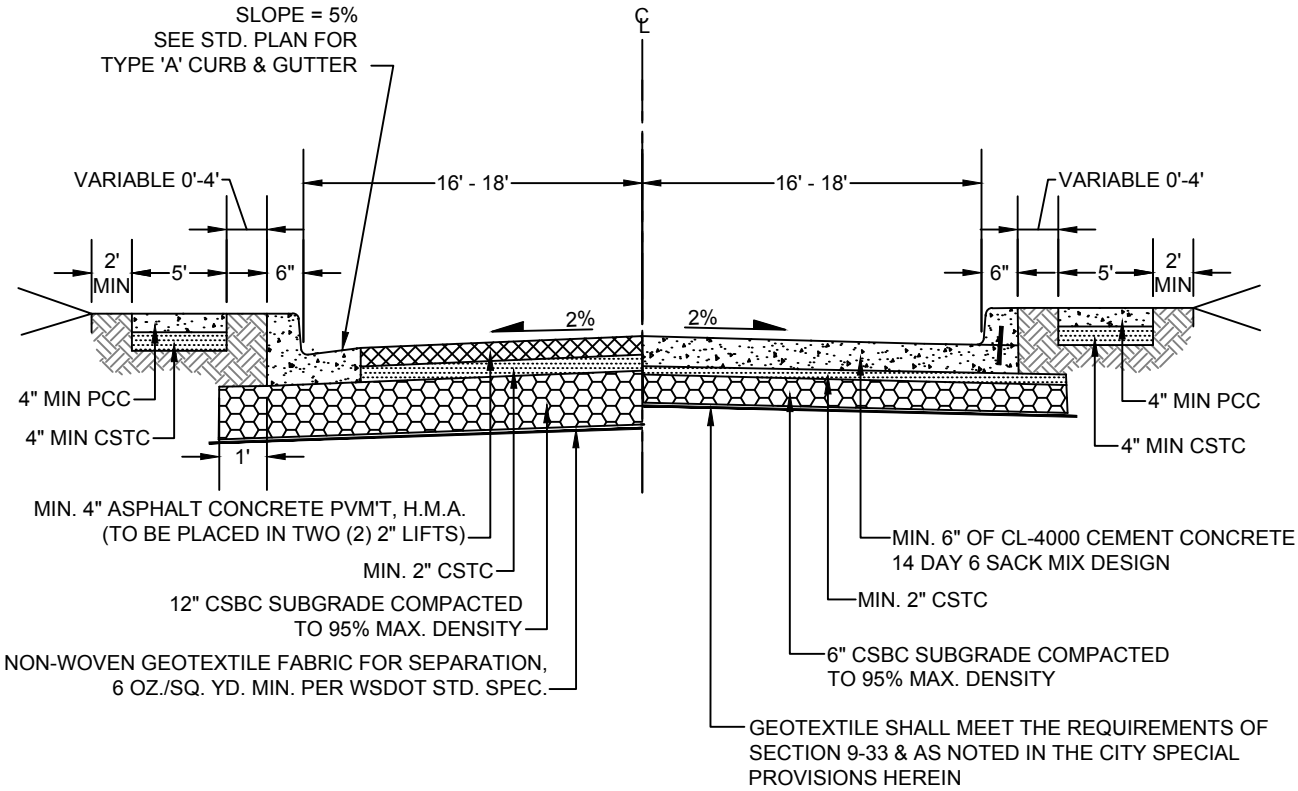

NOTE:

1. 5' SIDEWALK WITH MINIMUM 4" THICK (DRIVEWAY SECTIONS: 6" IN RESIDENTIAL, 8" IN COMMERCIAL) SEE STANDARD PLAN FOR SIDEWALK CONSTRUCTION.
2. NARROW STREETS MAY BE ALLOWED AS PART OF AN OVERALL LOW IMPACT DEVELOPMENT DESIGN APPROVED ON A CASE-BY-CASE BASIS BY THE CITY PUBLIC WORKS DIRECTOR.
3. PAVEMENT THICKNESS MAY VARY BASED ON SOILS, AND AS APPROVED BY THE CITY ENGINEER.

The City of Longview Washington	**LOCAL ACCESS STREET SECTION**	
	STANDARD PLAN: **ST - 080**	CITY ENGINEER APPROVAL: Longview: **C.B.**
	DATE: **JAN 2017**	

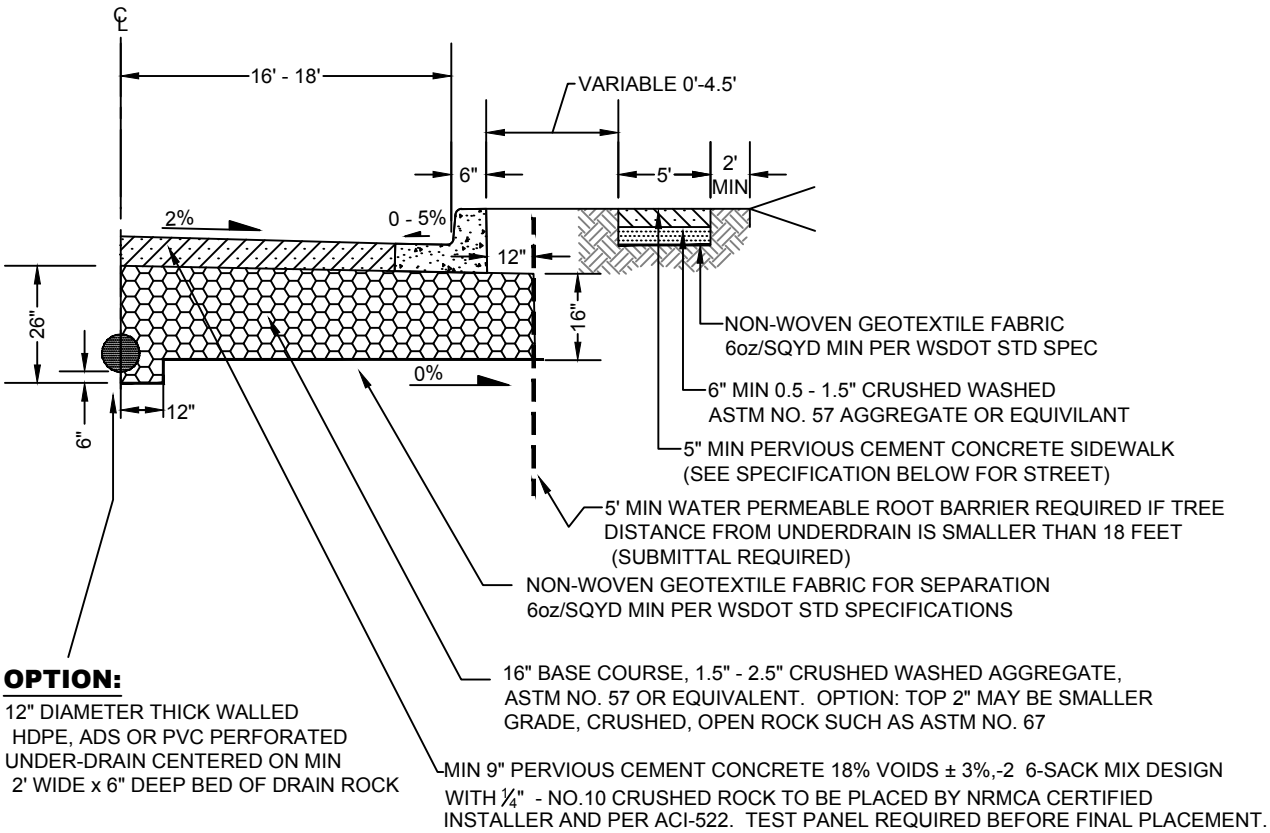

OPTION:

12" DIAMETER THICK WALLED HDPE, ADS OR PVC PERFORATED UNDER-DRAIN CENTERED ON MIN 2' WIDE x 6" DEEP BED OF DRAIN ROCK

NOTE:

PLAT AND SUBDIVISION COVENANTS SHALL PROHIBIT TO THE MAXIMUM EXTENT PRACTICABLE THE PLACEMENT OR LOSS OF SEDIMENTS OR OTHER DEBRIS THAT MAY CONTRIBUTE TO THE CLOGGING OF THE POROUS CONCRETE SURFACE.

DEVELOPER SHALL PROVIDE GRAVEL CONSTRUCTION ENTRANCES FOR EACH LOT IN AN EFFORT TO MINIMIZE SEDIMENT LOSSES TO THE PERVIOUS STREET DURING CONSTRUCTION PHASES.

INSTALL THE FOLLOWING SIGN OR STAINLESS STEEL BUTTONS: "PERVIOUS CONCRETE STREET. DUMP NO SEDIMENTS, DEBRIS, OR POLLUTANTS".

COMPACT SUBGRADE TO 95% OF MAX DENSITY, THEN SCARIFY SUBGRADE WITH RAKE; OR AS APPROVED.

SEPARATE TRADITIONAL AND PERMEABLE STREETS WITH MIN 6-MIL POLYETHYLENE SHEETING OR EQUIVALENT. WRAP SHEETING 3' BACK UNDER THE WASHED AGGREGATE BASE.

CONTACT PARKS DEPT FOR LIST OF APPROVED STREET TREES EDITED FOR SPECIES WHICH MAY ADD TO SURFACE CLOOGING.

STREET THICKNESS MAY BE CHANGED AND/OR THE UNDERDRAIN REMOVED PER GEOTECH AND ENGINEERING REPORTS AND APPROVAL BY CITY ENGINEER.

UNDERDRAIN MAY BE CONNECTED TO A CONTROL STRUCTURE FOR STORAGE.

The City of Longview Washington	**LOCAL ACCESS STREET SECTION PERVIOUS CONCRETE**	
	STANDARD PLAN: **ST - 082**	CITY ENGINEER APPROVAL: Longview: **C.B.**
	DATE: **JAN 2017**	

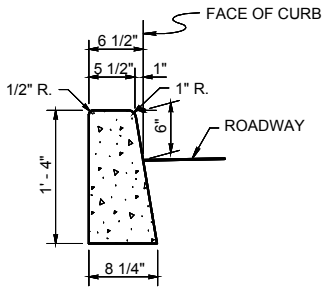

STANDARD STRAIGHT CURB

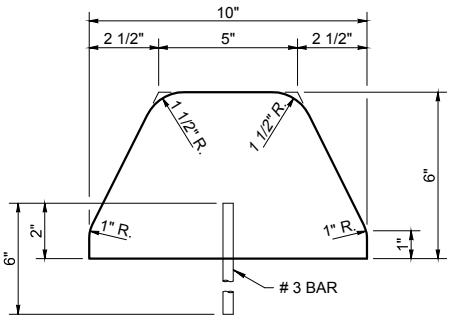

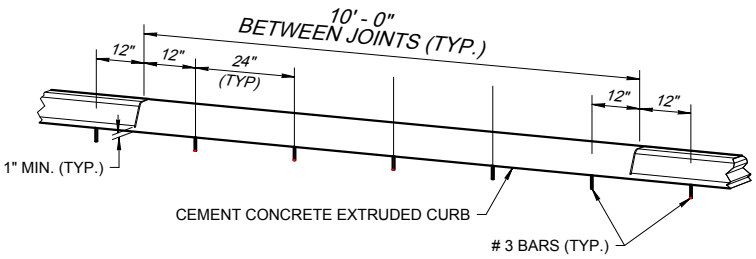

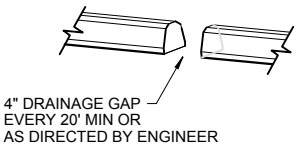

EXTRUDED CURB
TYPE 6

CEMENT CONCRETE

NOTES:

1. STANDARD STRAIGHT CURB SHALL NOT HAVE CONTRACTION JOINTS AND EXPANSION JOINTS SHALL BE FULL DEPTH AND MATCH THOSE FOR SIDEWALKS, SEE ST-150.
2. THE ULTIMATE COMPRESSIVE STRENGTH OF THE CONCRETE SHALL BE 4000 P.S.I. MINIMUM.
3. CRUSHED SURFACING SHALL BE PLACED BENEATH AND EXTEND ONE FOOT BEHIND CURB TO A DEPTH OF 6" MINIMUM & SHALL BE COMPACTED TO 95%.

The City of Longview Washington	CURB CONSTRUCTION	
	STANDARD PLAN: **ST - 090**	CITY ENGINEER APPROVAL: Longview: **C.B.**
	DATE: **JAN 2017**	

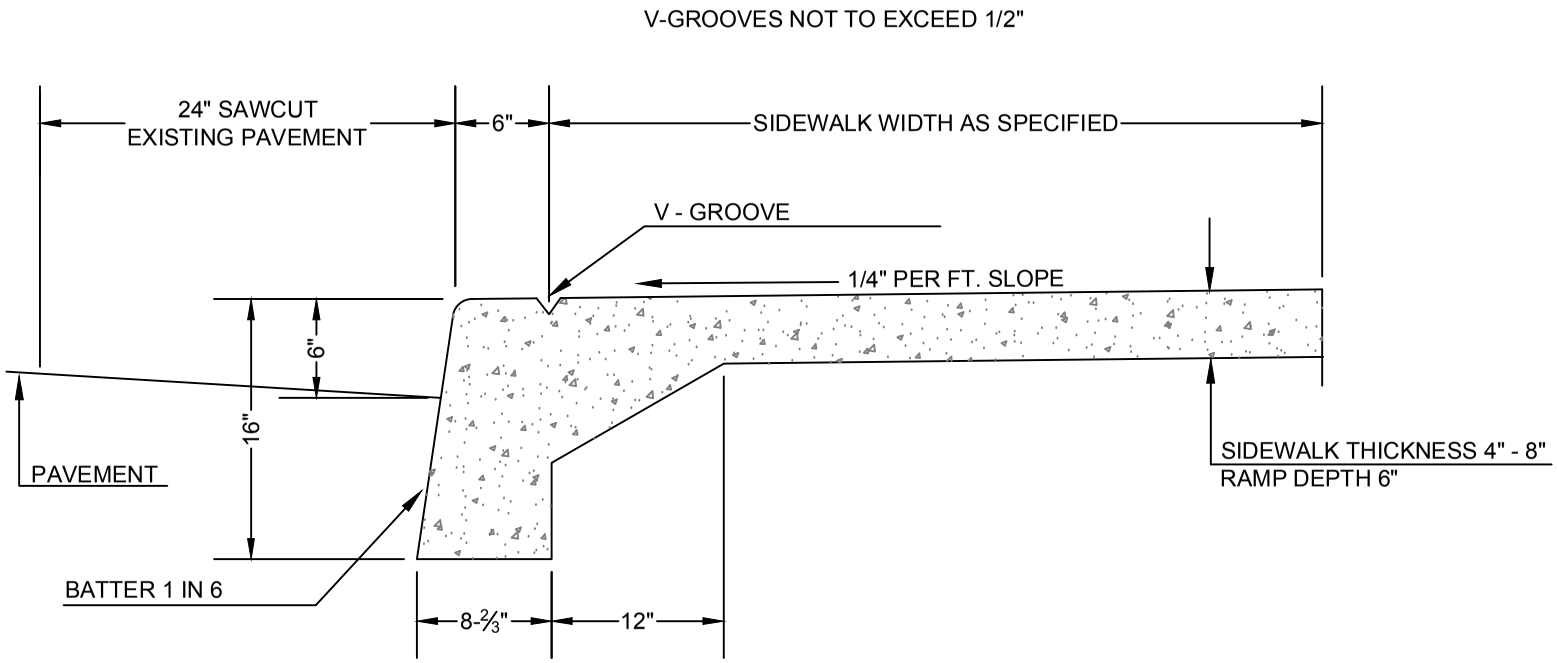

STANDARD CROSS SECTION

1. CRUSHED SURFACING SHALL BE PLACED BENEATH AND EXTEND 1-FOOT BEHIND CURB TO A DEPTH OF 6" MINIMUM & SHALL BE COMPACTED TO 95%.

2. SEE ST-150 FOR JOINTING.

The City of Longview Washington

MONOLITHIC CURB FOR SIDEWALKS & RAMPS

STANDARD PLAN: **ST - 100**

DATE: **JAN 2017**

CITY ENGINEER APPROVAL:

Longview: **C.B.**

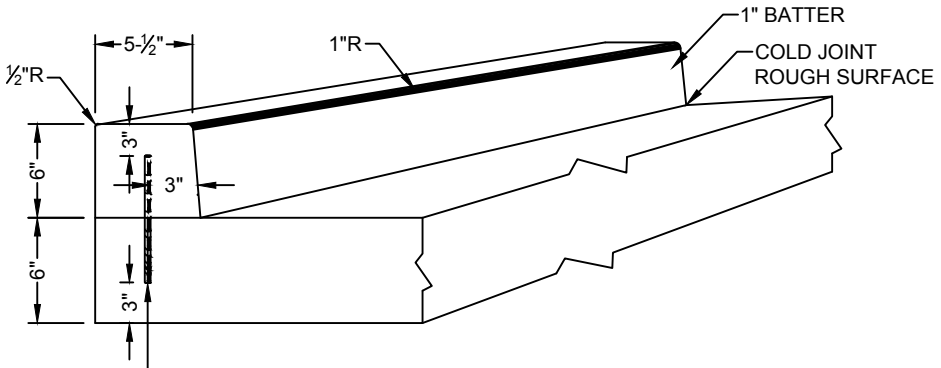

⅜" DIA. DEFORMED BAR, 6" LONG @ 18" O/C ASTM DESIGN A-15
TIE BARS SHALL BE ON HAND AT ALL TIMES SO THAT
IN THE EVENT THE CURB CANNOT BE POURED IMMEDIATELY
TIE BARS CAN BE USED IN THE GUTTER.
FOR CONCRETE STREET.

TYPE "B" CURB FOR CONCRETE STREET

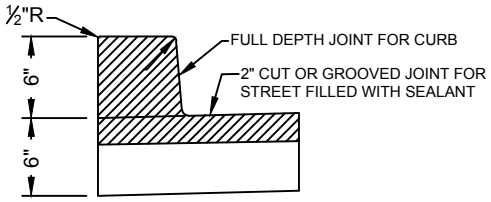

TYPE "B" CURB
CONTRACTION JOINT
CROSS SECTION

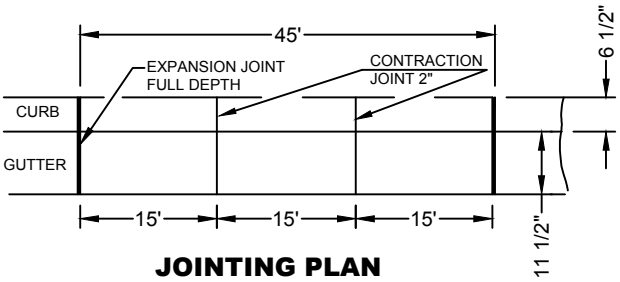

JOINTING PLAN
TOP VIEW

NOTES:

1. FULL DEPTH CUTS SHALL BE 1" DEEPER THAN GUTTER THICKNESS.
2. FORMS SHALL BE TRUE TO LINE & GRADE AND SECURELY STAKED.
3. THE 1" RADIUS ON THE UPPER & LOWER FACE OF CURB MAY BE FORMED BY EDGER OR BUILT INTO FACE FORM.
4. CEMENT CONCRETE, CLASS 4000 MIX DESIGN PER STANDARD SPECIFICATION 8-04.3(1) NO LESS THAN 6 SACK CEMENT, NO FLY ASH.
5. CRUSHED SURFACING SHALL BE PLACED BENEATH AND EXTEND 1 FT BEHIND CURB TO A DEPTH OF 6" MINIMUM & SHALL BE COMPACTED TO 95%.
6. JOINTING PLAN FOR MONOLITHIC CURB & SIDEWALK SHALL BE PER ST-150. WHERE CURB IS DETATCHED, JOINTING SHALL ALIGN THAT OF THE STREET.
7. FOR EXTRUDED CURB (& GUTTER) JOINTS MAY BE FORMED DURING INSTALLATION USING A RIGID DIVIDER OR SAW CUT AFTER CONCRETE CURES TO MINIMUM STRENGTH.
8. SEE ST-060 FOR ADDITIONAL JOINTING DETAILS. CONTRACTION JOINTS SHALL BE @ LEAST 25% OF PAVEMENT THICKNESS.

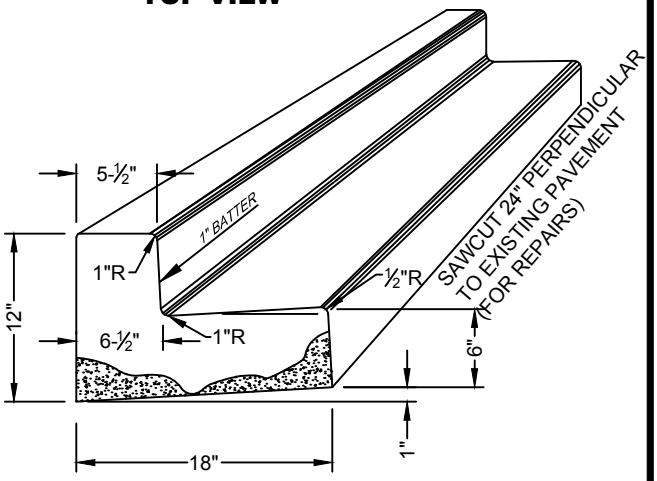

GUTTER SHALL BE TACKED
FULL FACE COVERAGE

TYPE "A" CURB & GUTTER
FOR STREET

The City of Longview Washington	**TYPE A & B CURB & GUTTER**	
	STANDARD PLAN: **ST - 110**	CITY ENGINEER APPROVAL: Longview: **C.B.**
	DATE: **JAN 2017**	

A PERMIT MUST BE OBTAINED FROM THE OFFICE OF THE CITY ENGINEER PRIOR TO CONSTRUCTION IN THE CITY RIGHT-OF-WAY. THE ENGINEERS OFFICE MUST BE NOTIFIED PRIOR TO THE START OF CONSTRUCTION.

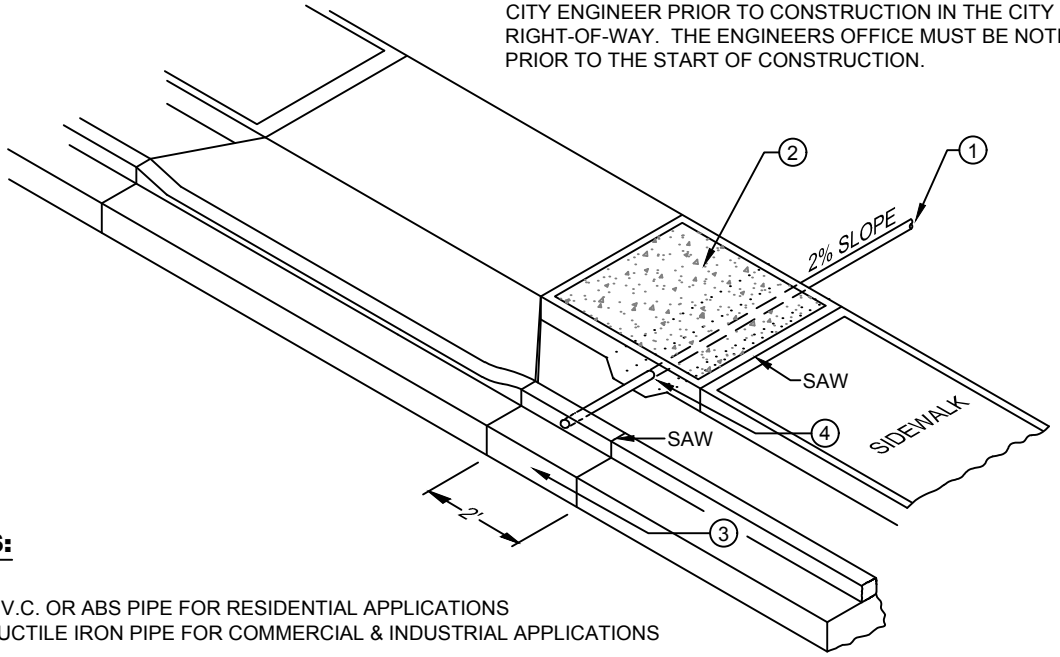

NOTES:

1. 3" DIA. P.V.C. OR ABS PIPE FOR RESIDENTIAL APPLICATIONS
   3" DIA. DUCTILE IRON PIPE FOR COMMERCIAL & INDUSTRIAL APPLICATIONS
2. SIDEWALK SHALL BE REMOVED TO EXISTING SCORE MARKS (FULL PANEL) OR AS DIRECTED BY THE ENGINEER. BROOM FINISH & MATCH EXISTING EDGE TREATMENT.
3. SAW & REMOVE 2' LENGTH OF CURB & GUTTER (FOR CONRETE STREET REMOVE CURB ONLY). INSTALL RE-INFORCED STEEL & DRAIN AS SHOWN BELOW. DRAIN PIPE TO BE CUT FLUSH WITH FACE OF CURB. CURB MAY BE CORE DRILLED IN LIEU OF REMOVAL-GROUT ALL VOIDS.
4. STEEL MESH TO BE 6" X 6" X 10 GAUGE
5. CONCRETE TO BE MINIMUM CLASS 4000
6. CONCRETE SHALL BE SAWED FULL DEPTH & EDGES SHALL BE STRAIGHT (CONCRETE DAMAGE DURING REMOVAL SHALL BE RE-SAWED TO LIMITS SET BY THE ENGINEER.
7. CURB DRAINS SHALL NOT BE INSTALLED WITHIN THE DRIVEWAY WING AREA.
8. INVERT OF THE CURB DRAIN SHALL MATCH FLOW LINE OF GUTTER.

SIDEWALK SECTION

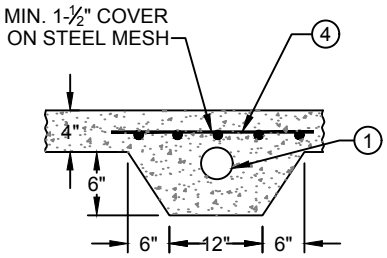

CURB SECTION & CONCRETE STREET

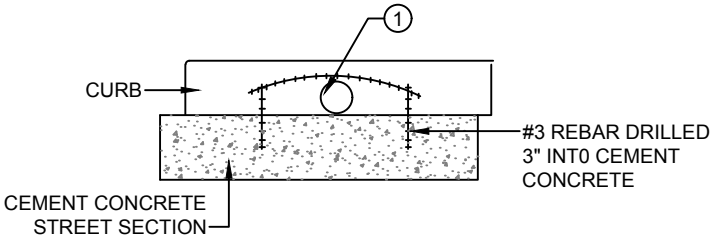

(CURB & GUTTER REPLACEMENT REQUIRES ONLY THE HORIZONTALLY PLACED RE-BAR)

The City of Longview Washington	**CURB DRAIN**	
	STANDARD PLAN: **ST - 120**	CITY ENGINEER APPROVAL: Longview: **C.B.**
	DATE: **JAN 2017**	

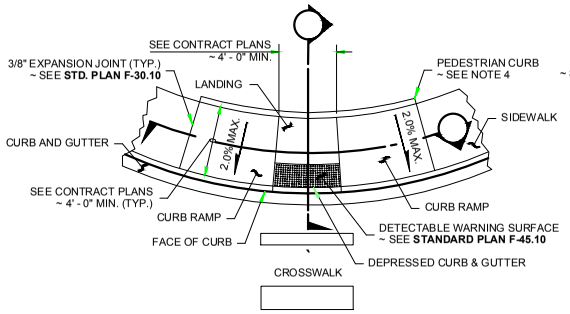

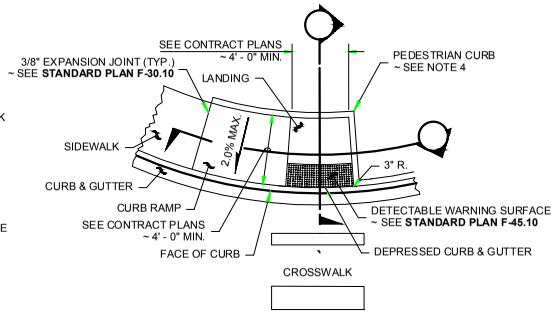

1. Provide a separate curb ramp for each marked or unmarked crosswalk. Curb ramp location shall be placed within the width of the associated crosswalk, or as shown in the Contract Plans.
2. Where "GRADE BREAK" is called out, the entire length of the grade break between the two adjacent surface planes shall be flush.
3. Do not place gratings, junction boxes, access covers, or other appurtenances in front of thre curb ramp or on any part of the curb ramp or landing.
4. See Contract Plans for the curb design specified. See **Standard Plan F-10.12** for Curb, Curb and Gutter, and Pedestrian Curb Details.
5. See **Standard Plan F-30.10** for Cement Concrete Sidewalk Details. See Contract Plans for width and placement of sidewalk.
6. The Bid Item "Cement Concrete Curb Ramp Type __" does not include the adjacent Curb, Curb and Gutter, Pedestrian Curb or Sidewalks.
7. The curb ramp maximum running slope shall not require the ramp length to exceed 15 feet to avoid chasing the slope indefinitely when connecting to steep grades. When applying the 15 foot max. length, the running slope of the curb ramp shall be as flat as feasible.
8. Curb ramp, landing, & flares shall receive broom finish. See **Standard Specifications 8-14.**
9. **Stamp street names where previously existed; and additionally for Longview in historic areas & the "Old West Side".**

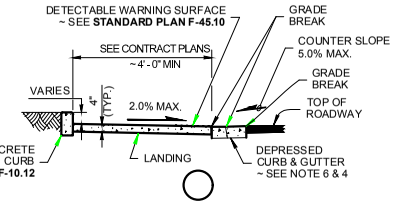

SLOPE IN EITHER DIRECTION

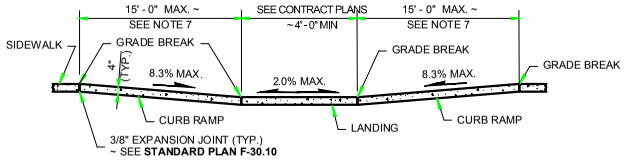

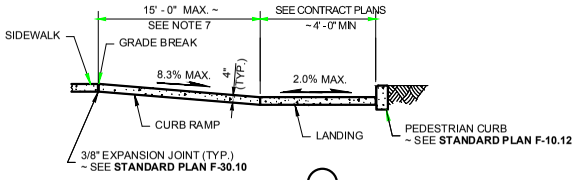

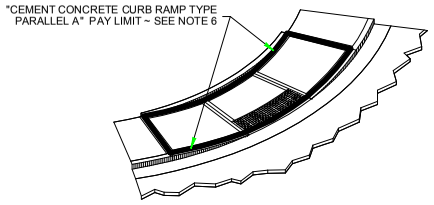

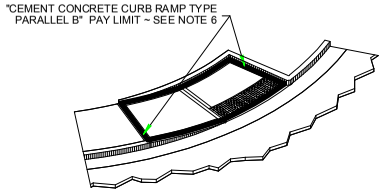

The City of Longview Washington

PARALLEL CURB RAMP

STANDARD PLAN: **ST - 131**

CITY ENGINEER APPROVAL:

DATE: **JAN 2017**

Longview: **C.B.**

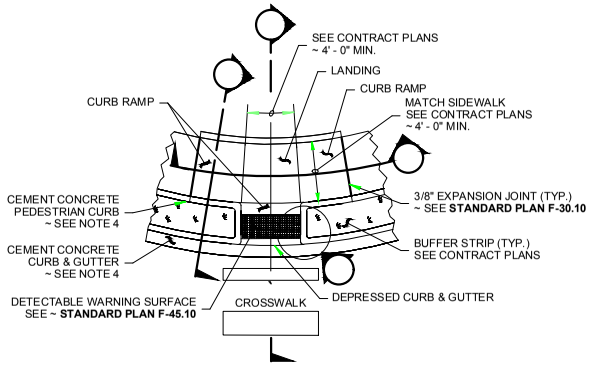

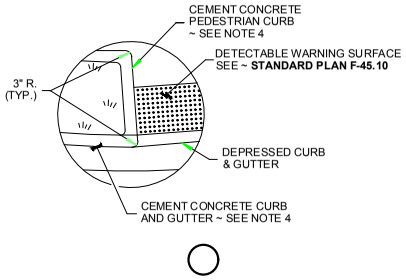

1. Provide a separate curb ramp for each marked or unmarked crosswalk. Curb ramp location shall be placed within the width of the associated crosswalk, or as shown in the Contract Plans.
2. Where "GRADE BREAK" is called out, the entire length of the grade break between the two adjacent surface planes shall be flush.
3. Do not place gratings, junction boxes, access covers, or other appurtenances in front of thre curb ramp or on any part of the curb ramp or landing.
4. See Contract Plans for the curb design specified. See **Standard Plan F-10.12** for Curb, Curb and Gutter, and Pedestrian Curb Details.
5. See **Standard Plan F-30.10** for Cement Concrete Sidewalk Details. See Contract Plans for width and placement of sidewalk.
6. The Bid Item "Cement Concrete Curb Ramp Type __" does not include the adjacent Curb, Curb and Gutter, Pedestrian Curb or Sidewalks.
7. The curb ramp maximum running slope shall not require the ramp length to exceed 15 feet to avoid chasing the slope indefinitely when connecting to steep grades. When applying the 15 foot max. length, the running slope of the curb ramp shall be as flat as feasible.
8. Curb ramp, landing & flares shall receive broom finish. See **Standard Specifications 8-14.**
9. **Stamp street names where previously existed; and additionally for Longview in historic areas & the "Old West Side".**

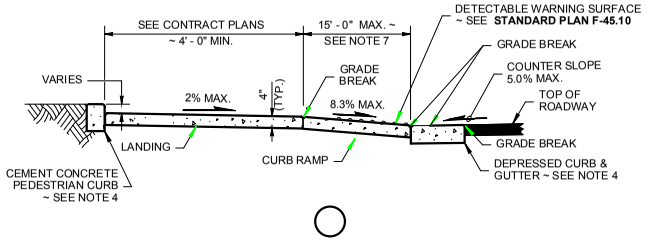

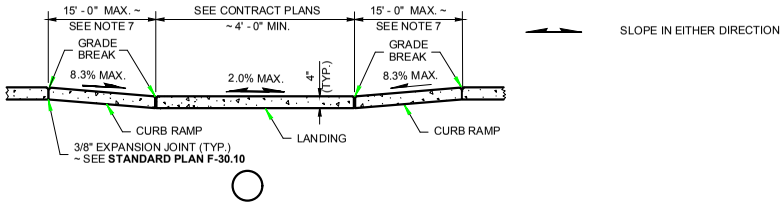

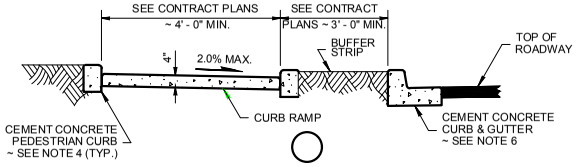

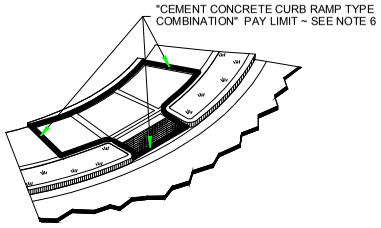

COMBINATION CURB RAMP

STANDARD PLAN: **ST - 132**

DATE: **JAN 2017**

CITY ENGINEER APPROVAL:

Longview: **C.B.**

PERPENDICULAR CURB RAMP

STANDARD PLAN: **ST - 134**

DATE: **JAN 2017**

CITY ENGINEER APPROVAL:

Longview: **C.B.**

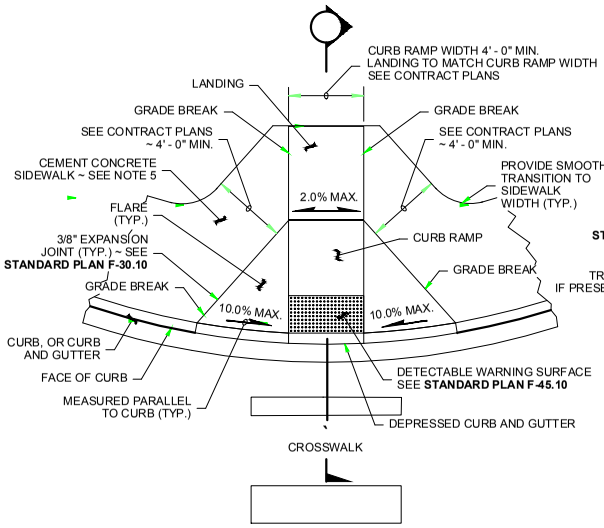

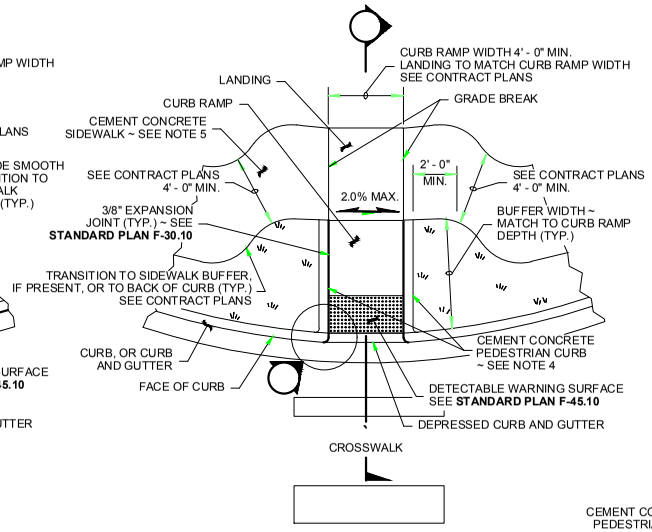

1. Provide separate curb ramp for each marked or unmarked crosswalk. Curb ramp location shall be placed within the width of the associated crosswalk, or as shown in the Contract plans.
2. Where "GRADE BREAK" is called out, the entire length of the grade break between the two adjacent surface planes shall be flush.
3. Do not place gratings, junction boxes, access covers, or other appurtenances in front of the curb ramp or on any part of the curb ramp or landing.
4. See the Contract plans for the curb design specified. See Standard Plan F-10.12 for curb, curb and gutter, and pedestrian curb details.
5. See **Standard Plan F-30.10** for Cement Concrete Sidewalk Details. See Contract plans for width and placement of sidewalk.
6. The Bid Item "Cement Concrete Curb Ramp Type __" does not include the adjacent Curb, Curb and Gutter, Pedestrian Curb or Sidewalks.
7. The curb ramp maximum running slope shall not require the ramp length to exceed 15 feet to avoid chasing the slope indefinitely when connecting to steep grades. When applying the 15 foot max. length, the running slope of the curb ramp shall be as flat as feasible.
8. Curb ramp, landing & flares shall receive broom finish. See **Standard Specifications 8-14.**
9. Stamp street names where previously existed; and additionally for Longview in historic areas & the "Old West Side".

SLOPE IN EITHER DIRECTION

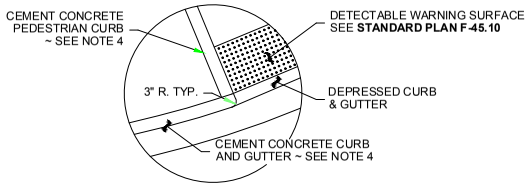

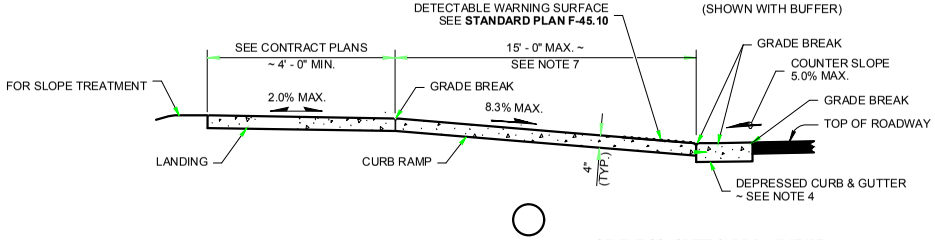

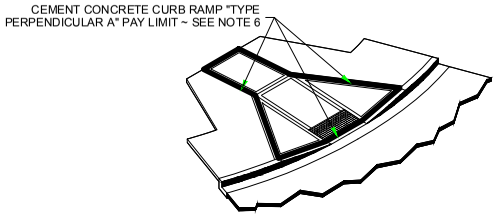

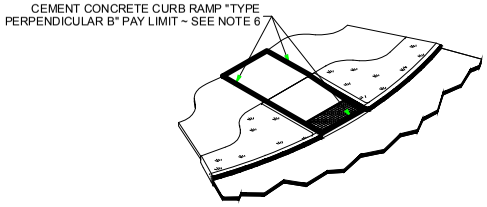

SINGLE DIRECTION CURB RAMP

STANDARD PLAN: **ST - 136**

DATE: **JAN 2017**

CITY ENGINEER APPROVAL:

Longview: **C.B.**

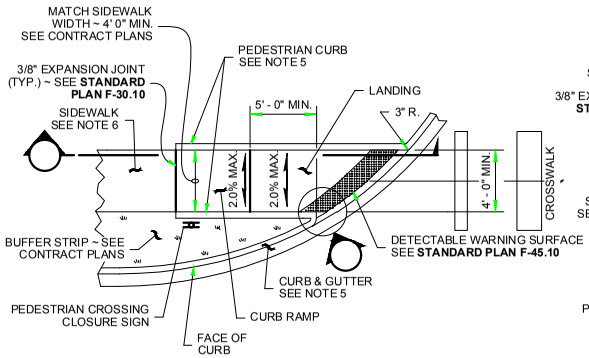

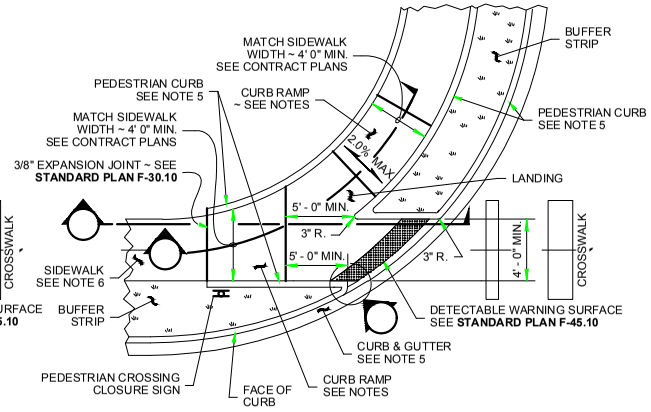

1. This plan is to be used where pedestrian crossing in one direction is not permitted.
2. Curb ramp location shall be placed within the width of the associated crosswalk, or as shown in the Contract Plans.
3. Where "GRADE BREAK" is called out, the entire length of the grade break between the two adjacent surface planes shall be flush.
4. Do not place gratings, junction boxes, access covers, or other appurtenances in front of the curb ramp or on any part of the curb ramp or landing.
5. See the Contract plans for the curb design specified. See Standard Plan F-10.12 for curb, curb and gutter, and pedestrian curb details.
6. See **Standard Plan F-30.10** for Cement Concrete Sidewalk Details. See Contract plans for width and placement of sidewalk.
7. The Bid Item "Cement Concrete Curb Ramp Type __" does not include the adjacent Curb, Curb and Gutter, Pedestrian Curb or Sidewalks, or the pedestrian crossing closure sign.
8. The curb ramp maximum running slope shall not require the ramp length to exceed 15 feet to avoid chasing the slope indefinitely when connecting to steep grades. When applying the 15 foot max. length, the running slope of the curb ramp shall be as flat as feasible.
9. Curb ramp, landing & flares shall receive broom finish. See **Standard Specifications 8-14.**
10. Stamp street names where previously existed; and additionally for Longview in historic areas & the "Old West Side".

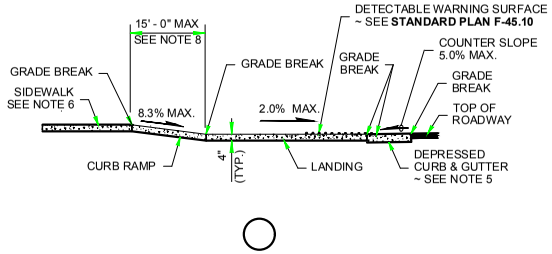

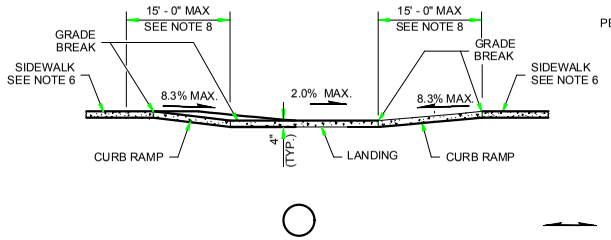

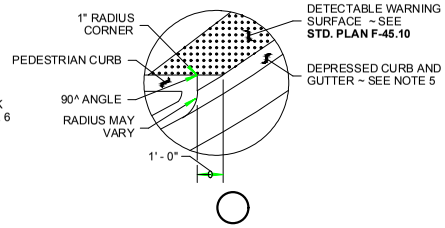

SLOPE IN EITHER DIRECTION

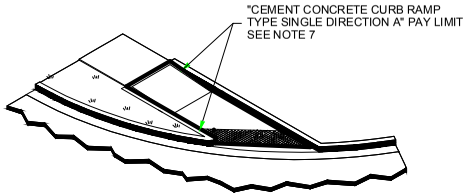

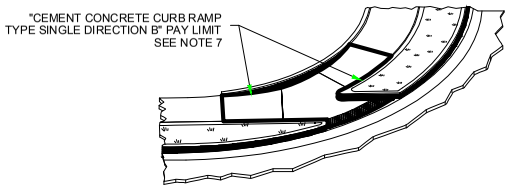

ADA RAMP TRUNCATED DOMES

STANDARD PLAN: **ST - 138**

CITY ENGINEER APPROVAL: Longview: **C.B.**

DATE: **JAN 2017**

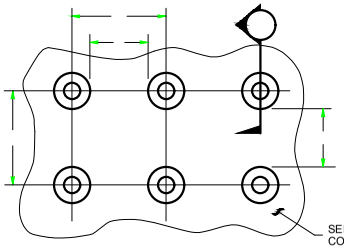

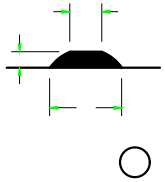

1.60"	2.40"
0.65"	—
0.45"	0.90"
0.9"	1.40"
0.2"	0.2"

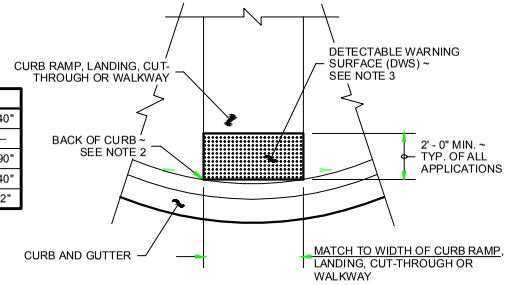

1. The Detectable Warning Surface (DWS) shall extend the full width of the curb ramp (exclusive of flares) or the landing.
2. The Detectable Warning Surface shall be placed at the back of curb, and need not follow the radius.
3. The rows of truncated domes shall be aligned to be perpendicular to the grade break at the back of curb.
4. The rows of truncated domes shall be aligned to be parallel to the direction of travel.
5. If curb and gutter are not present, such as a shared-use path connection, the Detectable Warning Surface shall be placed at the pavement edge.
6. See **Standard Plans** for sidewalk and curb ramp details.
7. If a curb ramp is required, the location of the Detectable Warning Surface must be at the bottom of the ramp and within the required distance from the rail.
8. When the grade break between the curb ramp and the landing is less than or equal to 5 ft. from the back of curb at all points, place the Detectable Warning Surface on the bottom of the curb ramp.

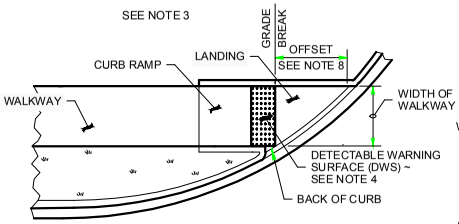

(GRADE BREAK BETWEEN CURB AND LANDING ≤ 5 FT. FROM BACK OF CURB)

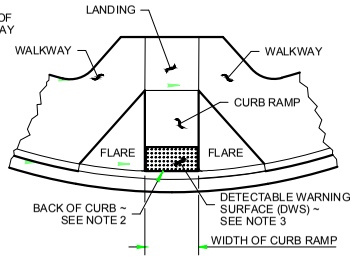

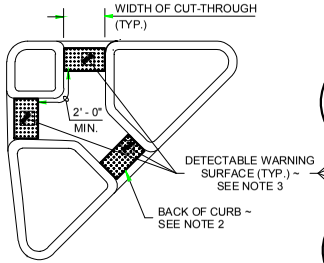

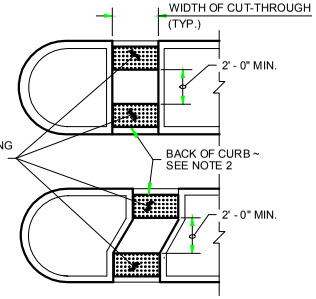

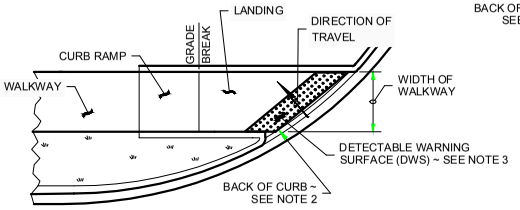

(GRADE BREAK BETWEEN CURB AND LANDING > 5 FT. FROM BACK OF CURB)

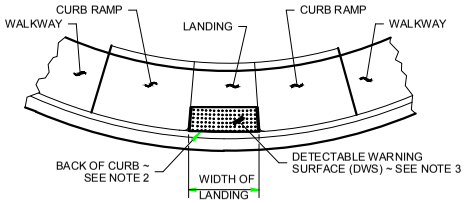

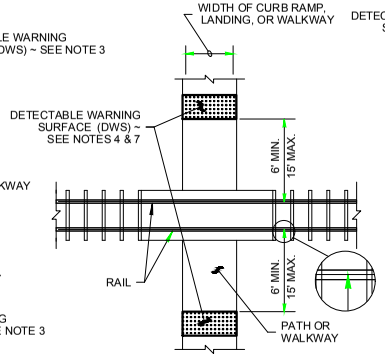

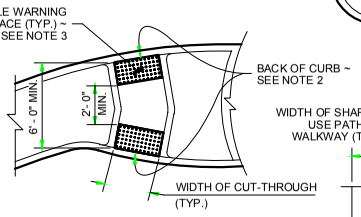

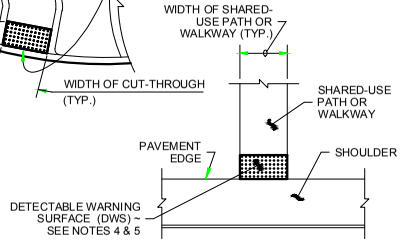

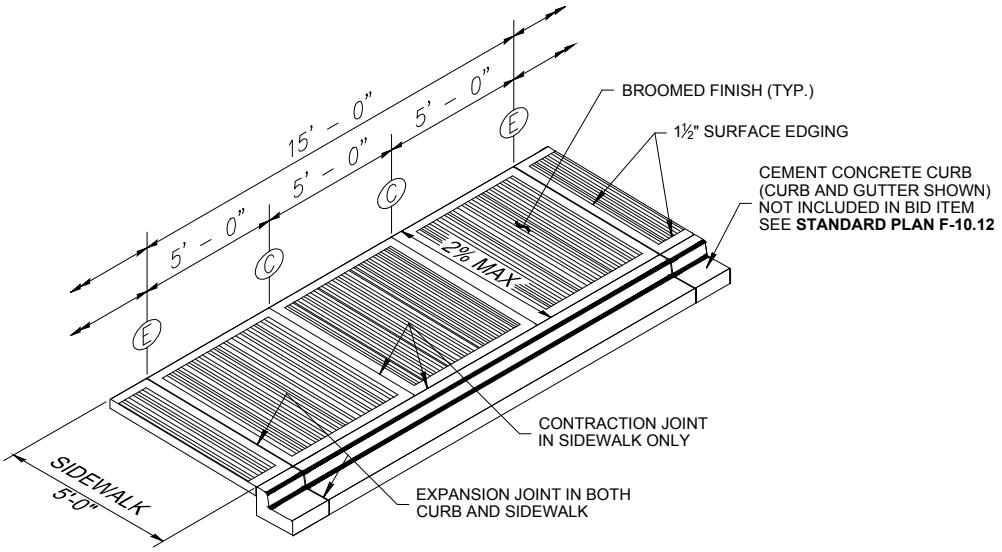

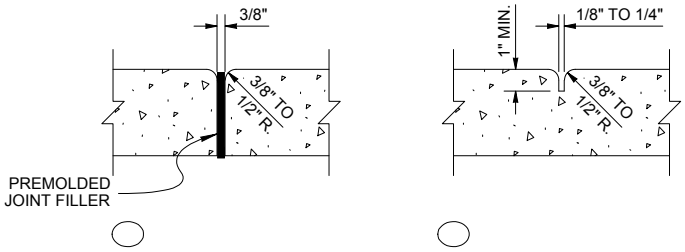

1. CONCRETE MIX (COMMERCIAL MIX) 3000 P.S.I., OR STRONGER.

2. CLEAR CONCRETE SEALER TO BE PLACED WITHIN (2) TWO HOURS AFTER FINISHING IS COMPLETE.

3. EXPANSION JOINTS AT CURB MUST ALIGN WITH EXPANSION JOINTS IN SIDEWALK.

4. EXPANSION JOINT ON REPLACED 4 FT. SIDEWALKS SHALL BE PLACED ON 16 FT. INTERVALS.

5. EXPANSION JOINTS SHALL BE PLACED AT POINTS OF TANGENCY ON STREETS, ALLEYS & DRIVEWAY RETURNS AND WHERE NEW CONCRETE IS POURED AGAINST EXISTING CONCRETE. ALL JOINTS SHALL BE CLEAN AND IN THE GUTTER SECTIONS SHALL BE EDGED. ALL COSTS SHALL BE INCIDENTAL TO THE COST OF THE CONTRACT.

6. AS A GENERAL RULE RESIDENTIAL SIDEWALKS SHALL BE PLACED 2 FT. FROM THE PROPERTY LINE AND COMMERCIAL SIDEWALKS SHALL BE PLACED ON THE PROPERTY LINE.

7. SIDEWALKS SHALL SLOPE 2% MAX TOWARD STREET.

8. BASE SHALL BE A MINIMUM OF4" CSTC.

9. THE TRANSITION AROUND FIXED OBJECTS ON THE WALKWAY, SUCH AS MAILBOXES AND STREET LIGHTS, SHALL MINIMIZE PEDESTRIAN AND CYCLISTS IMPACT AND BE APPROVED BY THE CITY ENGINEER. ALSO, CLUSTER STYLE MAILBOXES PROHIBITED ON COLLECTOR & ARTERIAL STREETS. STREET LAMP FOOTINGS SHALL BE @ LEAST 7' FROM OUTSIDE WING OF DRIVEWAY.

10. MATCH EXISTING PATTERN, COLOR, AND TEXTURE OF REPLACED CONCRETE TO THE MAXIMUM EXTENT PRACTICABLE WITH SURROUNDING SIDEWALK WHERE DESIGNATED BY THE CITY.

11. STAMP STREET NAMES AT INTERSECTIONS WHERE THEY PREVIOUSLY EXISTED AND IN "OLD WEST SIDE" AND HISTORIC AREAS.

12. JOINT MATERIAL TO BE ASPHALT IMPREGNATED.

13. FULL PANEL REPLACEMENT REQUIRED FOR ALL DAMAGED OR VANDALIZED CONCRETE. NO GRAFFITI DAMAGE OR REPAIRS WILL BE ACCEPTED.

14. 2" DEEP CONTRACTION JOINT IS ALLOWED.

The City of Longview Washington

SIDEWALKS

STANDARD PLAN: **ST - 150**	CITY ENGINEER APPROVAL:
DATE: **JAN 2017**	Longview: **C.B.**

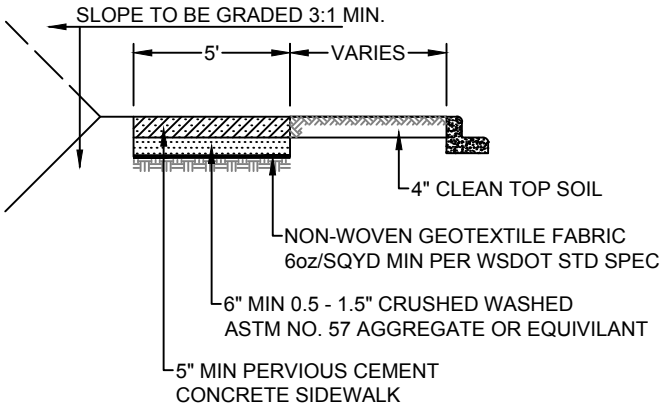

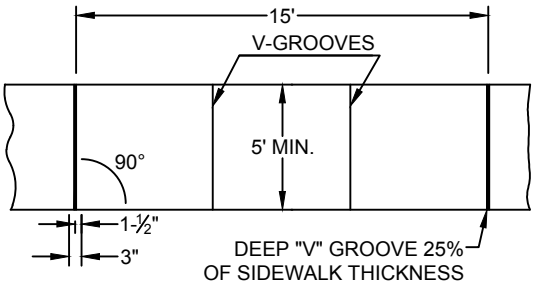

1. POROUS CEMENT CONCRETE, 18% VOIDS ±3%, ~6-SACK MIX DESIGN WITH ¼" - NO. 10 CRUSHED ROCK TO BE PLACED BY NRMCA CERTIFIED INSTALLER AND PER ACI-522. TEST PANEL MAY BE REQUIRED.
2. EMBED STAINLESS STEEL EDUCATIONAL DISC TO BE PROVIDED BY THE CITY.
3. EXPANSION JOINTS AT CURB MUST ALIGN WITH EXPANSION JOINTS IN SIDEWALK.
4. EXPANSION JOINTS SHALL BE PLACED AT POINTS OF TANGENCY ON STREETS, ALLEYS & DRIVEWAY RETURNS AND WHERE NEW CONCRETE IS POURED AGAINST EXISTING CONCRETE. ALL JOINTS SHALL BE CLEAN AND IN THE GUTTER SECTIONS SHALL BE EDGED. ALL COSTS SHALL BE INCIDENTAL TO THE COST OF THE CONTRACT.
5. AS A GENERAL RULE RESIDENTIAL SIDEWALKS SHALL BE PLACED 2 FT. FROM THE PROPERTY LINE AND COMMERCIAL SIDEWALKS SHALL BE PLACED ON THE PROPERTY LINE.
6. JOINT MATERIAL TO BE ASPHALT IMPREGNATED.
7. FULL PANEL REPLACEMENT REQUIRED FOR ALL DAMAGED OR VANDALIZED CONCRETE. NO GRAFFITI DAMAGE OR REPAIRS WILL BE ACCEPTED.
8. PERVIOUS CONCRETE SIDEWALKS SHALL NOT BE PLACED ON SLOPES GREATER THAN 8% WITHOUT APPROVAL BY CITY ENGINEER.

The City of Longview Washington

PERVIOUS SIDEWALKS

STANDARD PLAN: **ST - 152**

DATE: **JAN 2017**

CITY ENGINEER APPROVAL:

Longview: **C.B.**

A PERMIT MUST BE OBTAINED FROM THE OFFICE OF THE CITY ENGINEER PRIOR TO CONSTRUCTION IN THE CITY RIGHT-OF-WAY. THE ENGINEERS OFFICE MUST BE NOTIFIED PRIOR TO BEGINNING CONSTRUCTION.

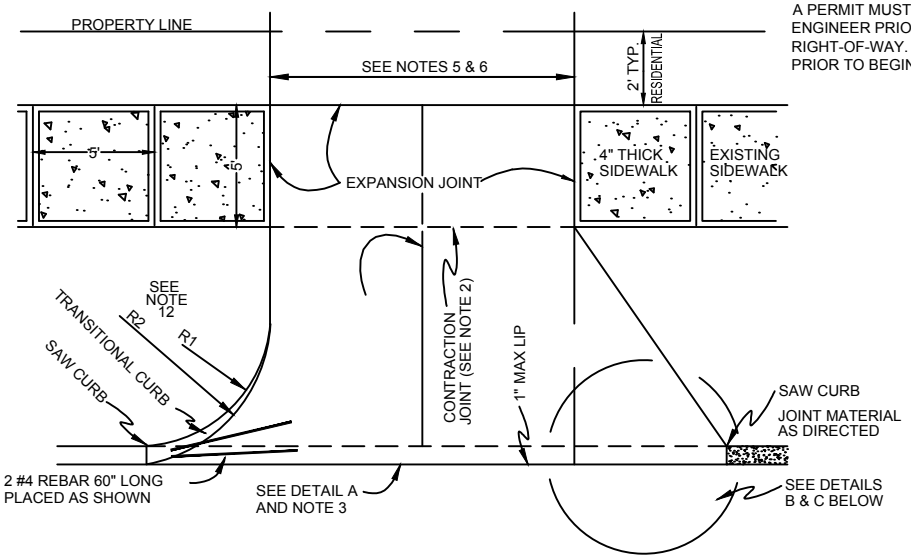

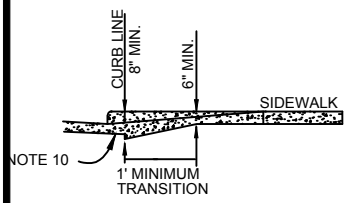

DETAIL A - THICKENED TRANSITION

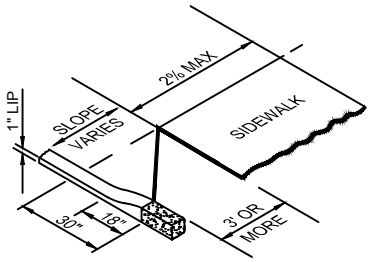

DETAIL B - DRIVEWAY APPROACH ONLY

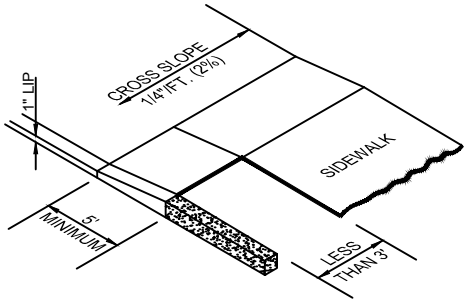

DETAIL C - DRIVEWAY APPROACH ONLY

GENERAL INSTRUCTIONS

1. DRIVEWAYS ON CITY PROPERTY MUST BE A MINIMUM OF 6" IN THICKNESS. CONCRETE SHALL BE CLASS 4000. ASPHALT IMPREGNATED JOINT MATERIAL SHALL BE PLACED AS SHOWN ON THIS PLAN.
2. WHERE A DRIVEWAY EXCEEDS 15' IN WIDTH, A CONSTRUCTION JOINT SHALL BE PLACED ALONG ITS CENTER LINE. WHERE APPROACH LENGTH EXCEEDS 15', PLACE ADDITIONAL TRANSVERSE CONTRACTION JOINT @ RAD POINT OR A DIRECTION AS THE CITY ENGINEER.
3. FOR ASPHALT STREETS, REMOVE EXISTING CURB & GUTTER SECTIONS, FOR CONCRETE STREETS, THE EXISTING STREET SHALL BE SAWED FULL DEPTH ALONG THE GUTTER LINE & THE CURB & ALL PAVEMENT UNDER THE CURB REMOVED. AN EXPANSION JOINT SHALL BE INSTALLED ALONG THE EXISTING PAVEMENT AT THE GUTTER LINE.
4. A 1" MAXIMUM LIP SHALL BE PROVIDED AT THE GUTTER LINE OF THE APPROACH.
5. LONGVIEW: DRIVEWAY WIDTH AT THE SIDEWALK SHALL NOT EXCEED 30' OR 40% OF THE TOTAL FRONTAGE WHICHEVER IS LESS.
6. CONCRETE TO BE 8" MINIMUM THICKNESS AT THE CURB LINE, TRANSITION TO 6" MIN. THICKNESS. SEE DETAIL A.
7. NON-SINGLE FAMILY RESIDENTIAL DRIVEWAYS MUST BE 8" THICK WITH 4000 P.S.I.
8. CRUSHED SURFACING SHALL BE PLACED & COMPACTED TO A DEPTH OF 8" MINIMUM OR AS DETERMINED BY THE ENGINEER PRIOR TO CONCRETE PLACEMENT.
9. SEE ST-060 FOR TRANSITION TO A.C. STREET.
10. APPROACH INSIDE AND OUTSIDE RADII SHALL BE 4' 6" AND 5' 0" FOR DRIVEWAYS, AND 6' 6" AND 7' 0" FOR ALLEYS.
11. CURB (FOR CONCRETE STREETS) AND CURB & GUTTER (FOR ASPHALT STREETS) POURED MONOLITHICALLY IN DRIVEWAY.
12. FURTHER REQUIREMENTS FOR FORMS, FORM SETTING, PLACING, FINISHING, AND CURING SHALL BE AS OUTLINED IN WSDOT STANDARD SPECS.

The City of Longview Washington

ALLEY AND DRIVEWAY APPROACH

STANDARD PLAN: **ST - 160**

DATE: **JAN 2017**

CITY ENGINEER APPROVAL:

Longview: **C.B.**

MONUMENT CASE AND COVER

STANDARD PLAN: **ST - 180**

DATE: **JAN 2017**

CITY ENGINEER APPROVAL:

Longview: **C.B.**

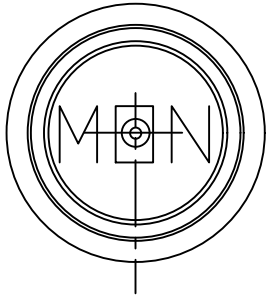

MONUMENT COVER

APPROXIMATE WEIGHTS	
CASE	60 LB
COVER	19 LB
TOTAL	79 LB

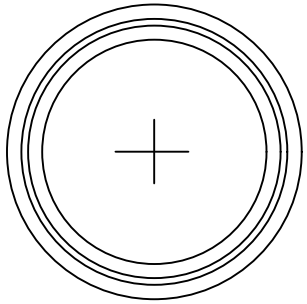

PLAN

RISER RING

RISER RING DIMENSIONS			
A (SIZE)	1 1/2"	2"	3"

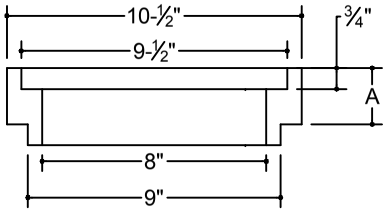

SECTION

RISER RING

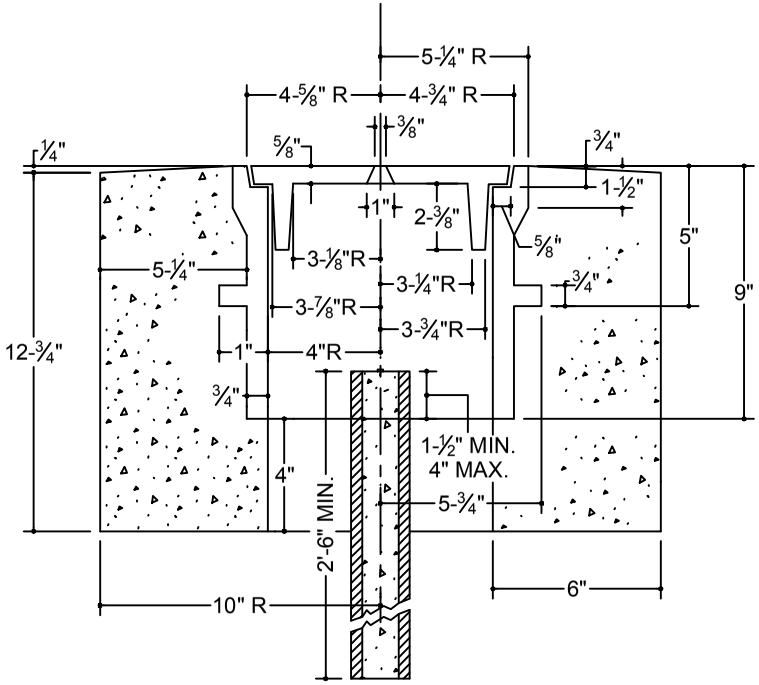

ASSEMBLY SECTION

CONCRETE SHALL BE CL 4000 COMMERCIAL MIX
& SHALL BE PROTECTED UNTIL 3500 PSI IS OBTAINED.

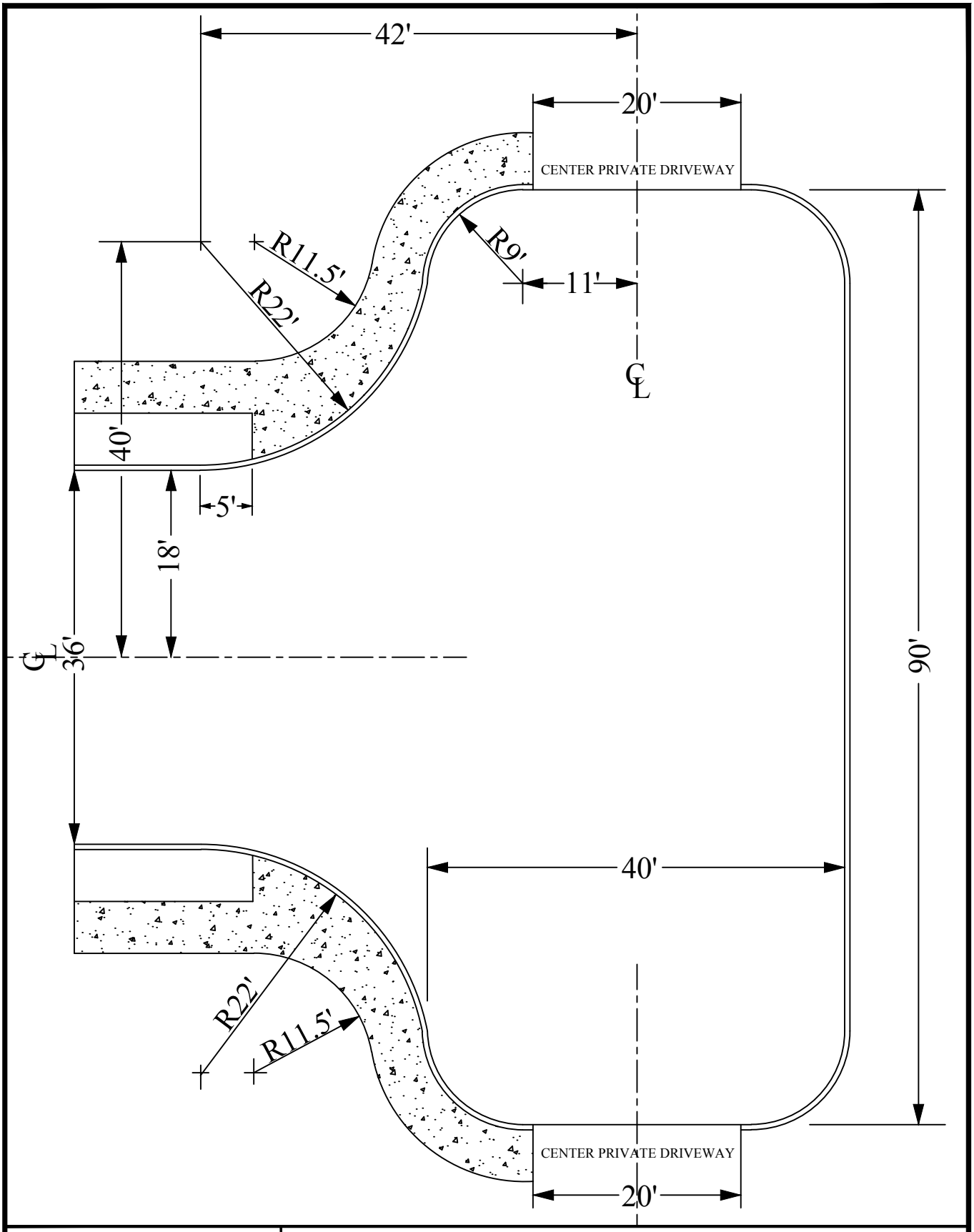

The City of Longview Washington	**HAMMERHEAD STREET**	
	STANDARD PLAN: **ST - 210**	CITY ENGINEER APPROVAL: Longview: **C.B.**
	DATE: **JAN 2017**	