Copyright © BergerABAM. All Rights Reserved.

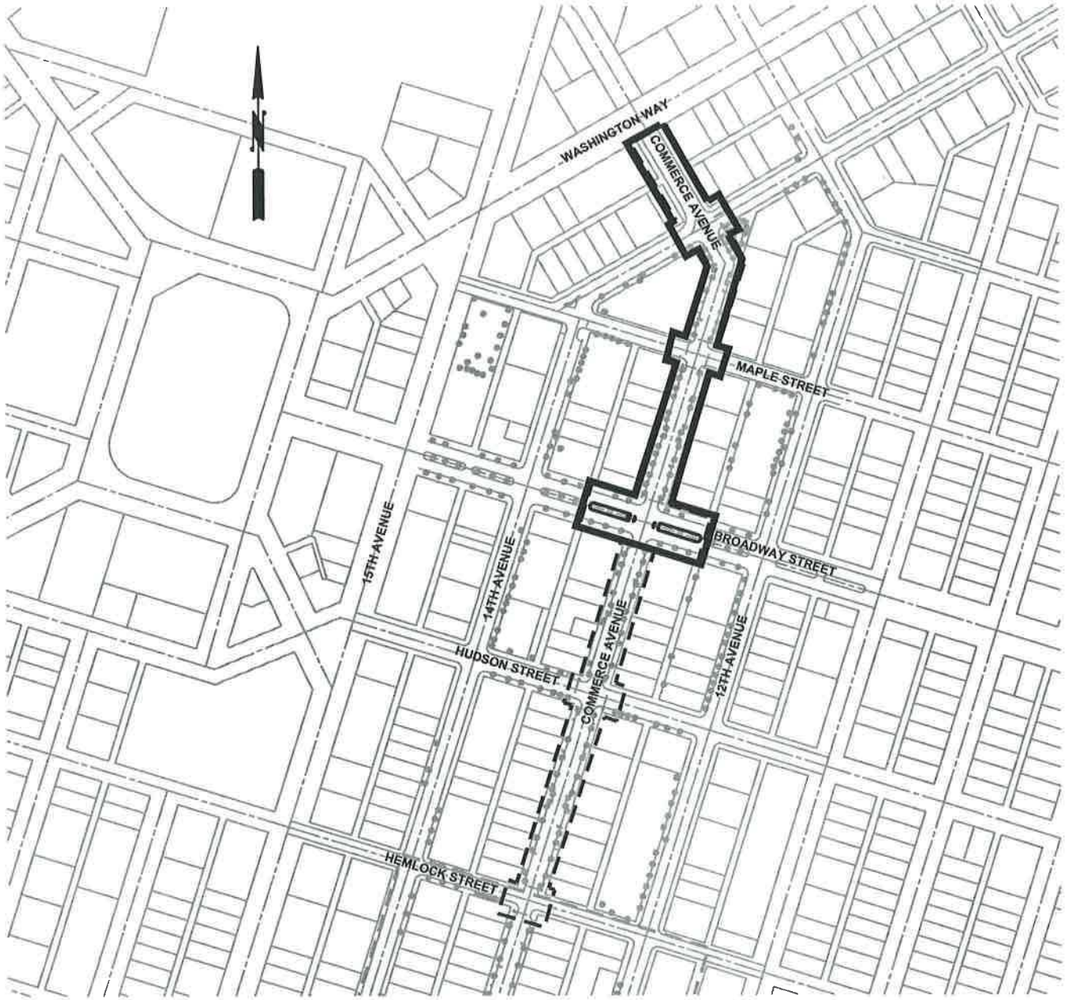

PROJECT AREA MAP - NOT TO SCALE

CITY OF LONGVIEW DOWNTOWN CORRIDOR IMPROVEMENTS

LONGVIEW, WASHINGTON

PHASE 1: WASHINGTON WAY TO BROADWAY STREET

PROJECT TEAM:

LANDSCAPE ARCHITECTS
BergerABAM
DAVID SACAMANO, RLA
1111 MAIN STREET, SUITE 300
VANCOUVER, WA 98660
(360) 823-6100

CIVIL ENGINEERS
BergerABAM
SAM ADAMS, PE
1111 MAIN STREET, SUITE 300
VANCOUVER, WA 98660
(360) 823-6100

ELECTRICAL ENGINEERS
TRANSPO GROUP
KEVIN COLLINS, PE
11730 118TH AVENUE NE STE 600
KIRKLAND WASHINGTON 98034
(425) 821-3665

CITY OF LONGVIEW:

PROJECT MANAGER
CITY OF LONGVIEW
AMY N. BLAIN
1525 BROADWAY STREET
LONGVIEW WASHINGTON 98632
(360) 442-5206

CITY OF LONGVIEW
MAYOR: DON JENSEN
CITY COUNCIL MEMBERS:
MIKE WALLIN
TOM HUTCHINSON
KEN BOTERO
STEVE MOON
MARY JANE MELINK
CHET MAKINSTER
CITY MANAGER: ROBERT J. GREGORY
PUBLIC WORKS DIRECTOR: JEFF D. CAMERON
CITY ENGINEER: CRAIG M. BOZARTH

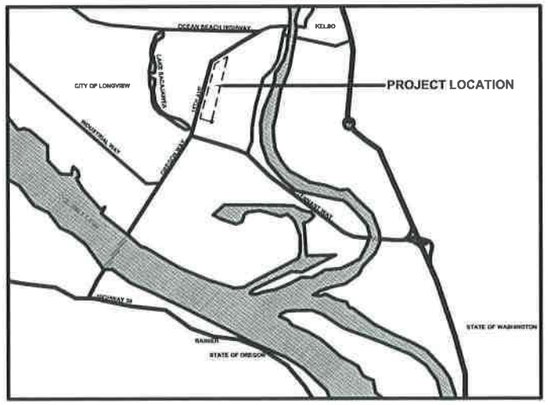

VICINITY MAP - NOT TO SCALE

ONE-CALL NOTE:
1-800-424-555
BURIED UTILITIES ARE SHOWN AS INDICATED ON RECORD MAPS AND VERIFIED WHERE POSSIBLE IN THE FIELD. BERGER ABAM ASSUMES NO LIABILITY FOR THE ACCURACY OF RECORDS OR FOR THE FINAL LOCATION OF EXISTING UTILITIES IN AREAS CRITICAL TO THE DESIGN.

100% SUBMITTAL

APPROVED FOR CONSTRUCTION: Jeff D. Cameron
Jeff D. Cameron, Public Works Director

MARK	REVISION DESCRIPTION	BY	APP.	DATE

FEDERAL AID NO.: TAP-6771 (001)
FEDERAL CONTRACT NO: TA-4635
STIP REFERENCE NO.: WA-04259
CITY OF LV PROJECT NO.: 13-2642-S

The City of Longview Washington

AMY BLAIN — STATE OF WASHINGTON — 39977 — REGISTERED PROFESSIONAL ENGINEER

DRAWN BY DRW
DESIGN BY DES
CHECK BY CHK
PROJ MGR DS

CITY OF LONGVIEW
DOWNTOWN STREETSCAPE DESIGN
GENERAL COVER

DRAWING NO. G-1
PROJECT NO. VAVAN-12-108
DATE: 10/25/13
SHEET NO. 1 OF 49

Last Saved by: Amyb on: May 22, 2014 2:14 PM File: R:\Engineers\PROJECTS_ACTIVE PROJECTS\DOWNTOWN CORRIDOR IMPROVEMENTS\100% Design Documents - FINAL\2013-10-31 - Longview Downtown Streetscape - Civil and Landscape\01_G01 - REV01.dwg

Copyright © BergerABAM. All Rights Reserved.

GENERAL NOTES:

1. ALL WORKMANSHIP AND MATERIALS SHALL BE IN ACCORDANCE WITH THE CITY OF LONGVIEW STANDARDS AND THE MOST CURRENT COPY OF THE STATE OF WASHINGTON STANDARD SPECIFICATIONS FOR ROAD, BRIDGE AND MUNICIPAL CONSTRUCTION (WSDOT/APWA).

2. ALL WORK IN THE CITY LIMITS REQUIRES A CITY OF LONGVIEW BUSINESS LICENSE. ALL CONTRACTORS SHALL BE LICENSED AND BONDED IN THE STATE OF WASHINGTON. PROPONENT SHALL COMPLY WITH ALL PERMITS AND OTHER REQUIREMENTS OF THE GOVERNING AUTHORITY OR AGENCY.

3. A PRE-CONSTRUCTION MEETING WITH THE CITY OF LONGVIEW IS REQUIRED. THE MEETING SHALL BE SCHEDULED A MINIMUM OF TWO (2) DAYS BEFORE THE START OF CONSTRUCTION. CONTACT PUBLIC WORKS AT (360) 442-5200 TO SCHEDULE.

4. CONTRACTOR SHALL BE RESPONSIBILE TO NOTIFY THE CITY OF SCHEDULE. INSPECTION BY CITY PERSONNEL SHALL BE DURING CITY WORK HOURS. CITY INSPECTION HOURS ARE 7:00 AM TO 6:00 PM MONDAY THROUGH THURSDAY, EXCEPT HOLIDAYS. A MINIMUM OF 24-HOURS NOTICE IS REQUIRED FOR INSPECTIONS. NO TRENCHING ON PUBLIC RIGHT-OF-WAY AFTER 4:00 PM UNLESS OTHERWISE APPROVED BY THE CITY. OTHER WORK SUCH AS BACKFILLING, CLEANUP OR APPROVED WORK IS ALLOWED IF 24-HOUR PRIOR NOTICE IS PROVIDED TO THE CITY.

5. TEMPORARY EROSION/WATER POLLUTION MEASURES SHALL BE REQUIRED IN ACCORDANCE WITH SECTION 1-07.15 OF THE WSDOT STANDARD SPECIFICATIONS, THE WASHINGTON ECOLOGY STORM WATER MANAGEMENT MANUAL AND LONGVIEW MUNICIPAL CODE. AT NO TIME WILL SILTS AND DEBRIS BE ALLOWED TO DRAIN INTO AN EXISTING OR NEWLY INSTALLED STORM WATER FACILITY OR ADJACENT ROADS OR PROPERTIES. THE CONTRACTOR SHALL NOT RELEASE STORM WATER TO THE SANITARY SEWER SYSTEM. ALL EROSION CONTROL AND WATER POLLUTION PREVENTION MEASURES SHALL BE REGULARLY INSPECTED AND MAINTAINED BY THE CONTRACTOR.

6. CONTRACTOR SHALL BE RESPONSIBILE TO NOTIFY ALL EMERGENCY SERVICES, FIRE, POLICE, ETC. IF STREETS OR OTHER ACCESSES ARE OBSTRUCTED. CONTRACTOR SHALL BE RESPONSIBLE TO NOTIFY LONGVIEW FIRE .

7. CONTRACTOR SHALL BE RESPONSIBLE FOR ALL TRAFFIC CONTROL IN ACCORDANCE WITH THE MANUAL ON UNIFORM TRAFFIC CONTROL DEVICES AND DEPT OF L&i. PRIOR TO DISRUPTION OF ANY TRAFFIC, TRAFFIC CONTROL PLANS SHALL BE PREPARED AND SUBMITTED TO THE CITY FOR APPROVAL. NO WORK SHALL COMMENCE UNTIL ALL APPROVED TRAFFIC CONTROL IS IN PLACE.

8. CONTRACTOR SHALL MAINTAIN PEDESTRIAN ACCESS AT ALL TIMES DURING CONSTRUCTION. A DETAILED PEDESTRIAN CONTROL PLAN SHALL BESUBMITTED FOR CITY APPROVAL BEFORE STARTING WORK.

9. CONTRACTOR SHALL CONSTRUCT TEMPORARY PEDESTRIAN CORRIDOR WHERE NEEDED OR IDENTIFIED FOR ACCESS USING 4' WIDE CONTINUOUS GREEN ASTRO-TURF OR OTHER APPROVED NON-SKID MATERIAL. CONTRACTOR SHALL CHECK ALL PEDESTRIAN WALKWAYS AT THE END OF EACH WORK DAY TO ENSURE SAFE & STABLE ACCESS. WHERE ON-STREET PEDESTRIAN CORRIDOR IS PROVIDED, ACCESS SHALL BE CONTIGUOUS WITH THE CURB AND DELINEATED BY APPROVED SAFETY BARRICADES.

10. THE COLOR GREEN SHALL BE UTILIZED AS THE IDENTIFYING COLOR FOR THE PROJECT TO CALL ATTENTION TO CONSTRUCTION SIGNS, BANNERS, PAVEMENT MARKERS, PEDESTRIAN BARRICADES, SIGNAGE, ETC.

11. CONTRACTOR SHALL BE RESPONSIBLE FOR THE LOCATION, CONTINUATION OF SERVICE, AND PROTECTION OF ALL EXISTING UTILITIES. CONTRACTOR SHALL VERIFY ALL UTILITY LOCATIONS PRIOR TO CONSTRUCTION BY CALLING THE UNDERGROUND LOCATE LINE AT 1-800-424-5555 A MINIMUM OF TWO (2) BUSINESS DAYS PRIOR TO ANY START.

12. CONTRACTOR SHALL IMMEDIATELY REPAIR ANY WATER, SEWER OR STORM SERVICE LINES BROKEN ON PRIVATE PROPERTY IN ACCORDANCE WITH UPC, WSDOT OR OTHER APPROPRIATE STANDARDS. CONTRACTOR SHALL NOTIFY THE CITY OF ANY UTILITIES BROKEN IN THE RIGHT-OF-WAY AND IMMEDIATELY COMPLETE REPAIRS UNLESS OTHERWISE DIRECTED.

13. ALL UTILITIES SHALL BE STAKED FOR GRADES AND ALIGNMENT BY AN LICENSED ENGINEERING OR SURVEYING FIRM CAPABLE OF PERFORMING SUCH WORK.

14. APPROVED BLUEPRINTS SHALL BE ON-SITE AT ALL TIMES DURING CONSTRUCTION.

15. CONTRACTOR SHALL RESTORE WORK AREA TO SAME OR BETTER CONDITION UNLESS OTHERWISE APPROVED OR SPECIFIED.

16. ALL DISTURBED AREAS EXCEPT PAVED AND ROCKED SURFACES SHALL BE SEEDED AND MULCHED OR SIMILARLY STABILIZED TO THE SATISFACTION OF THE CITY AND IN ACCORDANCE WITH THE STANDARDS. WHERE GRASS IS PLANTED, THE PERFORMANCE AND OR MAINTENANCE GUARANTEES WILL NOT BE RELEASED UNTIL GRASS IS THOROUGHLY ESTABLISHED, UNLESS OTHERWISE APPROVED BY THE CITY.

17. CITY SHALL RETAIN SALVAGE RIGHTS TO ALL EXISTING TREES, SHRUBS AND FURNISHINGS REMOVED DURING CONSTRUCTION.

18. NATIVE MATERIAL MAY BE RE-USED FOR BACKFILL IF APPROVED BY THE CITY.

19. ALL ROADWAY RESTORATION SHALL BE AS SPECIFIED IN THE CITY OF LONGVIEW DESIGN AND CONSTRUCTION STANDARDS OR TO THE DEPTH OF THE EXISTING PAVEMENT, WHICHEVER IS GREATER. EXISTING CONCRETE SHALL BE SAWCUT TO A SMOOTH STRAIGHT EDGE PRIOR TO FINAL PATCHING, UNLESS OTHERWISE APPROVED BY THE CITY.

20. ALL CONCRETE PAVEMENT RESTORATION SHALL BE SAWCUT FULL DEPTH TO A STRAIGHT EDGE PRIOR TO FINAL PATCHING. 5000-PSI 3-DAY CONCRETE MIX SHALL BE USED, POURED FULL DEPTH PLUS 2-INCHES PER CITY STANDARD PLAN ST-030. DOWELS ARE REQUIRED UNLESS APPROVED.

21. PERMANENT PATCHES SHALL BE COMPLETED WITHIN FIVE (5) WORKING DAYS UNLESS OTHERWISE APPROVED BY THE CITY. ANY TEMPORARY PATCH REQUIRING MORE THAN (5) WORKING DAYS SHALL BE HMA. TEMPORARY PATCHES SHALL BE 2" CLASS B ASPHALT CONCRETE PAVEMENT, 2" MEDIUM CURING (MC-250) LIQUID ASPHALT (COLDMIX), OR 2" ASPHALT TREATED BASE. CONTRACTOR SHALL PROPERLY MAINTAIN PATCHES. IF NOT MAINTAINED, THE CITY WILL PERFORM ANY NECESSARY REPAIR AND BILL THE CONTRACTOR.

22. CONTRACTOR'S EMPLOYEES, SUPPLIERS AND SUBCONTRACTORS SHALL NOT UTILIZE TEMPORARY YELLOW ON-STREET DIAGONAL CUSTOMER PARKING, OR PRIVATE PARKING LOTS, WITHOUT WRITTEN PERMISSION FROM THE BUSINESS OWNERS. FREE 72-HOUR PUBLIC PARKING LOTS ARE AVAILABLE ON 12TH AVENUE. FREE 3-HOUR PARKING IS AVAILABLE ON 14TH AVENUE; 72-HOURS PARKING ON 14TH AVENUE IS AVAILABLE BY PERMIT ONLY. PARKING ENFORCEMENT IS CONDUCTED DAILY.

GENERAL NOTES: STREET & S/W CONSTRUCTION

1. ALL CURB, GUTTER, STREET AND SIDEWALK GRADES, AND ANY OTHER VERTICAL AND/OR HORIZONTAL ALIGNMENT SHALL BE STAKED BY A LICENSED ENGINEERING OR SURVEYING FIRM CAPABLE OF PERFORMING THE WORK.

2. FORM AND SUBGRADE INSPECTION BY THE CITY IS REQUIRED BEFORE PLACING ASPHALT OR CONCRETE. TWENTY-FOUR HOURS NOTICE IS REQUIRED FOR FORM INSPECTION.

3. TESTING AND SAMPLING FREQUENCIES WILL BE AS DESCRIBED IN THE CITY OF LONGVIEW DESIGN AND CONSTRUCTION STANDARDS AND WSDOT STANDARDS.

4. CONTRACTOR SHALL PROVIDE AND INSTALLS STREET NAME AND REGULATORY SIGNS AT NO COST TO THE CITY. CONTRACTOR SHALL REMOVE & RE-INSTALL ALL EXISTING PARKING, TRAFFIC & OTHER STREET SIGNS AT NO ADDITIONAL COST TO THE CITY.

5. CONTRACTOR SHALL COORDINATE JOINT LAYOUT WITH THE CITY PRIOR TO SAWCUTTING TRANSITIONS BETWEEN NEW AND EXISTING CONCRETE. WHERE END OF EXISTING SIDEWALK PANELS ARE WITHIN 2-FT OF THE LIMITS OF RE-CONSTRUCTION, CONTRACTOR SHALL EXTEND RECONSTRUCT LIMITS TO THE NEAREST EXISTING JOINT.

6. CONTRACTOR SHALL PROTECT THE BUILDING FRONT WHEN SAWCUTTING ALONG THE FACE OF BUILDING. PLYWOOD SHEETING OR OTHER APPROVED MATERIAL SHALL BE USED TO SHIELD THE BUILDING FROM DAMAGE, DUST, WATER AND DEBRIS.

7. CONTRACTOR SHALL MAINTAIN A 6" CURB & MATCH THE ELEVATION OF EXISTING WALK AT THE EDGE OF RIGHT-OF-WAY. WHERE THE RIGHT-OF-WAY IS CONTIGUOUS WITH FACE OF BUILDING, CONTRACTOR SHALL MARK SIDEWALK SURFACE LINE AT THE BUILDING PRIOR TO SIDEWALK REMOVAL.

8. SIDEWALKS SHALL BE CONSTRUCTED TO MEET ADA REQUIREMENTS. EXISTING GRADES VARY AND CONTRACTOR SHALL BE RESPONSIBLE TO IDENTIFY GRADE CHANGES AND MAKE CORRECTIONS AS NEEDED TO ADJUST FOR CROSS SLOPE. WHERE TOTAL CROSS SLOPE IS 2% OR LESS, SIDEWALK SHALL BE CONTINUOUSLY SLOPED FROM FACE OF BUILDING TO CURB. WHERE TOTAL CROSS SLOPE EXCEEDS 2% BUT IS LESS THAN 3.2%, SIDEWALK SHALL BE CONTINUOUSLY SLOPED FROM FACE OF BUILDING TO FURNISHING ZONE, THEN RE-SLOPED FROM FURNISHING ZONE TO TOP OF CURB BUT NOT EXCEEDING 5%. SEE SHEET C-7 FOR ADDITIONAL SIDEWALK OPTIONS.

9. COMPACTION OF SUBGRADE, SUB-BASE, BASE, SURFACING, PAVEMENT, OR LAYERS OF SIMILAR MATERIAL SHALL BE IN ACCORDANCE WITH SECTION 2-06 AND SECTION 4-04.3(5) OF THE WSDOT STANDARD SPECIFICATIONS FOR ROAD, BRIDGE AND MUNICIPAL CONSTRUCTION. FILL SHALL BE PROVIDED IN 6" MAXIMUM LIFTS UNLESS OTHERWISE APPROVED BY THE CITY, AND SHALL BE COMPACTED TO 95% OF ITS MAXIMUM RELATIVE DENSITY.

10. CITY INSPECTION IS REQUIRED DURING ALL PHASES OF CONSTRUCTION. CONTRACTOR SHALL CALL FOR INSPECTION AT LEAST 24-HOURS IN ADVANCE; INSPECTION BY CITY PERSONNEL SHALL BE CONDUCTED DURING CITY WORK HOURS: 7:00 AM TO 6:00 PM MONDAY TO THURSDAY, EXCEPT HOLIDAYS.

11. CONTRACTOR SHALL PROVIDE ONE COMPLETE SET OF CONCRETE FINISHING TOOLS TO CITY AT PROJECT COMPLETION.

GENERAL NOTES: ARTWORK REMOVAL AND REPLACEMENT

7. CONTRACTOR SHALL REMOVE, TRANSPORT, AND STORE HISTORIC DOWNTOWN SIGNS AT CITY DESIGNATED LOCATION DURING CONSTRUCTION AND RE-INSTALL PER LOCATION ON PLANS AFTER CONSTRUCTION.

8. CONTRACTOR SHALL DISASSEMBLE EXISTING ARTWORK AND TRANSPORT TO CITY DESIGNATED LOCATION. CONTRACTOR SHALL COORDINATE WITH THE CITY TO IDENTIFY, LOCATE, DOCUMENT, DISASSEMBLE AND RE-LOCATE ART PRIOR TO START OF WORK. AT THE CITY'S DISCRETION, ART MAY BE TEMPORARILY STORED OR RE-INSTALLED AT AN ALTERNATE LOCATION WITHIN CITY LIMITS.

9. AFTER SIDEWALK CONSTRUCTION IS COMPLETE, CONTRACTOR SHALL REINSTALL ALL ARTWORK WITH NEW CONCRETE FOOTINGS AND COORDINATE FINAL ART PLACEMENT WITH THE CITY.

10. ALL ARTWORK SHALL BE REINSTALLED PER DETAIL 8, LA-9, STANDARD ART BASE. CONTRACTOR SHALL SUPPLY AND INSTALL ALL WELDS, ANCHORS OR OTHER HARDWARE REQUIRED TO TEMPORARILY OR PERMANENTLY INSTALL ARTWORK.

GENERAL NOTES: BUSINESS ACCESS COORDINATION

1. ACCESS TO BUSINESS ENTRANCES AND PARKING AREAS MUST BE MAINTAINED. CONTRACTOR SHALL SUBMIT A BUSINESS ACCESS PLAN TO THE CITY FOR APPROVAL.

2. WHERE BUSINESS ACCESSES ARE ADJACENT TO CONSTRUCTION, CONTRACTOR SHALL PROVIDE CARPET MATS OR OTHER APPROVED MEANS TO MINIMIZE DUST TRACKED INTO THE BUSINESS.

3. CONTRACTOR SHALL NOTIFY ALL AFFECTED RESIDENTS & BUSINESSES AT LEAST 48 HOURS IN ADVANCE OF ANY DRIVEWAY CLOSURE, UTILITY SHUT-OFF OR OTHER WORK ACTIVITY THAT POTENTIALLY IMPACTS THE BUSINESS.

4. CONTRACTOR SHALL BE RESPONSIBLE TO WORK WITH AND NOTIFY ALL AFFECTED PROPERTY OWNERS TO MAINTAIN ACCESS TO BUSINESSES DURING CONSTRUCTION. THE CONTRACTOR SHALL PROVIDE THE CITY & BUSINESS OWNERS WITH EMERGENCY TELEPHONE NUMBERS AT THE TIME OF THE PRE-CONSTRUCTION MEETING AND SHALL SUPPLY A FOREMAN ON SITE AT ALL TIMES.

5. CONTRACTOR SHALL COORDINATE ACCESS FOR ALL SERVICES INCLUDING BUT NOT LIMITED TO MAIL DELIVERY, BUSINESS DELIVERY/PICK-UP, GARBAGE AND RECYCLING COLLECTION AND ANY PUBLIC, SCHOOL OR SPECIAL TRANSPORTATION SERVICES.

GENERAL NOTES: CONSTRUCTION SEQUENCING

1. CONTRACTOR SHALL CONSTRUCT WORK IN ACCORDANCE WITH THE SEQUENCE PROVIDED IN THE SPECIAL PROVISIONS. IF CONTRACTOR ELECTS TO PURSUE AN ALTERNATIVE WORK SEQUENCE, A DETAILED PROPOSAL SHALL BE SUBMITTED TO THE CITY FOR APPROVAL PRIOR TO STARTING WORK.

2. CONTRACTOR SHALL SUBMIT A WEEKLY LOOK-AHEAD SCHEDULE TO THE CITY WHICH OUTLINES SPECIFIC WORK TO BE PERFORMED THE FOLLOWING WEEK AND TENTATIVE WORK TO BE PERFORMED THE SECOND WEEK.

SHEET INDEX:

SHEET NO.	DRAWING NO.	DRAWING TITLE
		GENERAL
1	G-1	GENERAL - COVER
2	G-2	GENERAL - INDEX AND NOTES
3	G-3	LEGEND AND ABBREVIATIONS
		DEMOLITION
4	D-3	EXISTING CONDITIONS & DEMO PLAN - AREA 3
5	D-4	EXISTING CONDITIONS & DEMO PLAN - AREA 4
6	D-5	EXISTING CONDITIONS & DEMO PLAN - AREA 5
		CIVIL
7	C-3	CIVIL PLAN - AREA 3
8	C-4	CIVIL PLAN - AREA 4
9	C-5	CIVIL PLAN - AREA 5
10	C-6	CIVIL DETAILS - INTERSECTION & MID-BLOCK ENLARGEMENTS
11	C-7	CIVIL DETAILS
		MATERIALS
12	LA-1	MATERIAL & FURNISHING - NOTES & LEGEND
13	LA-4	MATERIAL & FURNISHING - AREA 3
14	LA-5	MATERIAL & FURNISHING - AREA 4
15	LA-6	MATERIAL & FURNISHING - AREA 5
16	LA-7	MATERIAL & FURNISHING DETAILS - INTERSECTION & MID-BLOCK ENLARGEMENTS
17	LA-8	MATERIAL & FURNISHING DETAILS
18	LA-9	MATERIAL & FURNISHING DETAILS
		LANDSCAPE
19	LP-1	LANDSCAPE PLAN - NOTES & PLANT SCHEDULE
20	LP-4	LANDSCAPE PLAN - AREA 3
21	LP-5	LANDSCAPE PLAN - AREA 4
22	LP-6	LANDSCAPE PLAN - AREA 5
23	LP-7	LANDSCAPE PLAN - INTERSECTION & MID-BLOCK ENLARGEMENTS
24	LP-8	LANDSCAPE DETAILS
		IRRIGATION
25	IP-1	IRRIGATION PLAN - NOTES & LEGEND
26	IP-4	IRRIGATION PLAN - AREA 3
27	IP-5	IRRIGATION PLAN - AREA 4
28	IP-6	IRRIGATION PLAN - AREA 5
29	IP-7	IRRIGATION PLAN - DETAILS
30	IP-8	IRRIGATION PLAN - DETAILS
		ILLUMINATION
31	IL-1	ILLUMINATION PLAN - NOTES, LEGEND & SCHEDULES
32	IL-4	ILLUMINATION PLAN - AREA 3
33	IL-5	ILLUMINATION PLAN - AREA 4
34	IL-6	ILLUMINATION PLAN - AREA 5
35	IL-7	ILLUMINATION PLAN
36	IL-9	ILLUMINATION WIRING SCHEDULE
37	IL-10	ILLUMINATION WIRING SCHEDULE

100% SUBMITTAL

MARK	REVISION DESCRIPTION	BY	APP.	DATE

FEDERAL AID NO.: TAP-6771 (001)
FEDERAL CONTRACT NO: TA-4635
STIP REFERENCE NO.: WA-04259
CITY OF LV PROJECT NO.: 13-2642-S

The City of Longview Washington

AMY BLAIN — STATE OF WASHINGTON — 39977 — REGISTERED PROFESSIONAL ENGINEER

DRAWN BY DRW
DESIGN BY DES
CHECK BY CHK
PROJ MGR DS

CITY OF LONGVIEW
DOWNTOWN STREETSCAPE DESIGN
GENERAL
INDEX AND NOTES

DRAWING NO. G-2
PROJECT NO. VAVAN-12-108
DATE: 10/25/13
SHEET NO. 2 OF 49

Last Saved by: Amyb on: Jun 9, 2014 3:46 PM File: R:\Engineers\PROJECTS_ACTIVE PROJECTS\DOWNTOWN CORRIDOR IMPROVEMENTS\100% Design Documents - FINAL\2013-10-31 - Longview Downtown Streetscape - Civil and Landscape\G-2 DWGS FROM ABAM APRIL-2014\SHEET G-2\01_G02-REV01.dwg

Copyright © BergerABAM. All Rights Reserved.

ABBREVIATIONS

ABAN	ABANDONED
ACP	ASPHALT CONCRETE PAVEMENT
APROX	APPROXIMATELY
APWA	AMERICAN PUBLIC WORKS ASSOCIATION
ASPH	ASPHALT
@	AT
AVE	AVENUE
AWWA	AMERICAN WATER WORKS ASSOCIATION
BLVD	BOULEVARD
BMP	BEST MANAGEMENT PRACTICES
BOT	BOTTOM
BP	BEGIN POINT
BVC	BEGIN VERTICAL CURVE
BVCE	BEGIN VERTICAL CURVE ELEVATION
BVCS	BEGIN VERTICAL CURVE STATION
CAVFS	COMPOSED–AMENDED VEGETATED FILTER STRIP
CB	CATCH BASIN
℄	CENTERLINE
CDF	CONTROLLED DENSITY FILL
CFS	CUBIC FEET PER SECOND
CL	CENTERLINE OR CLASS
CLR	CLEAR
CM	CENTIMETER
CMP	CORRUGATED METAL PIPE
CO	CLEAN OUT
COMM	COMMUNICATION
CONC	CONCRETE
CORR	CORRUGATED
CSBC	CRUSHED SURFACING BASE COURSE
CSTC	CRUSHED SURFACING TOP COURSE
CTR	CENTER
CY	CUBIC YARDS
DI	DUCTILE IRON
DIA	DIAMETER
DIAM	DIAMETER
ø	DIAMETER
DIP	DUCTILE IRON PIPE
DIV	DIVISION
DR	DRIVE
DROP	DROP INLET
DWY	DRIVEWAY
DWG	DRAWING
E	EAST
EL	ELEVATION
ELEV	ELEVATION
EOP	EDGE OF PAVEMENT
EP	END POINT
ESAL	EQUIVALENT SINGLE AXLE LOAD
EVCE	END VERTICAL CURVE ELEVATION
EVCS	END VERTICAL CURVE STATION
EVC	END VERTICAL CURVE
EVPE	EMERGENCY VEHICLE PREEMPTION EMITTER
EX	EXISTING
EXIST	EXISTING
EXP	EXPANSION
F/C	FACE OF CURB
FG	FINISH GRADE
FL	FLANGE
FM	FORCE MAIN
FT	FOOT OR FEET
GV	GATE VALVE
GRAV	GRAVEL
H	HEIGHT
H	HORIZONTAL
HDPE	HIGH DENSITY POLYETHYLENE PIPE
HMA	HOT MIX ASPHALT
HORZ	HORIZONTAL
ID	INSIDE DIAMETER
IE	INVERT ELEVATION
IN	INCH(ES)
L	LENGTH
LBS	POUNDS
LF	LINEAR FEET
LN	LANE
LT	LEFT
LUM	LUMINAIRE
LVC	LENGTH OF VERTICAL CURVE
MH	MANHOLE
MAX	MAXIMUM
MID	MIDDLE
MIN	MINIMUM
MISC	MISCELLANEOUS
MJ	MECHANICAL JOINT
MOD	MODIFIED
MTG	MOUNTING
NDCBU	NEIGHBORHOOD DELIVERY AND COLLECTION BOX UNIT
N	NORTH
NE	NORTHEAST
NOM	NOMINAL
NTS	NOT TO SCALE
NW	NORTHWEST
OC	ON CENTER
OD	OUTSIDE DIAMETER
OH	OVERHEAD
OSHA	OCCUPATIONAL SAFETY AND HEALTH ADMINSTRATION
PC	POINT OF CURVATURE
PCC	POINT OF COMPOUND CURVATURE
PI	POINT OF HORIZONTAL INTERSECTION
⅊	PROPERTY LINE
POC	POINT ON CURVE
PPM	PARTS PER MILLION
PROP	PROPOSED
PSE	PUGET SOUND ENERGY
PSF	POUNDS PER SQUARE FOOT
PSI	POUNDS PER SQUARE INCH
PT	POINT OR POINT OF TANGENCY
PVC	POLYVINYL CHLORIDE PIPE
PVI	POINT OF VERTICAL INTERSECTION
QPEAK	PEAK FLOW
R	RADIUS OR RANGE
RCP	REINFORCED CONCRETE PIPE
RIT	RAISED INTERSECTION TRANSITION
R/W	RIGHT–OF–WAY
ROW	RIGHT–OF–WAY
RT	RIGHT
S	SOUTH
SL	SLOPE
SE	SOUTHEAST
SEC	SECTION
SHLDR	SHOULDER
SPEC	SPECIFICATION
SS	SANITARY SEWER
SSMH	SANITARY SEWER MANHOLE
SD	STORM DRAIN
SF	SQUARE FOOT
ST	STREET
STA	STATION
STD	STANDARD
SW	SOUTHWEST
SWPPP	STORMWATER POLLUTION PREVENTION PLAN
SYM	SYMETRICAL
TELE	TELEPHONE
T	TOWNSHIP OR TANGENT LENGTH
TESC	TEMPORARY EROSION & SEDIMENT CONTROL
THK	THICK
TRANS	TRANSFORMER
TV	TELEVISION
TYP	TYPICAL
UG	UNDERGROUND
US	UNITED STATES
UV	UTILITY VAULT COMPANY
VC	VERTICAL CURVE
V	VERTICAL
VERT	VERTICAL
W	WEST
W/	WITH
WA	WASHINGTON
WSDOT	WASHINGTON STATE DEPARTMENT OF TRANSPORTATION
WM	WILLAMETTE MERIDIAN
WP	WORK POINT
WQ	WATER QUALITY
WS	WATER SURFACE
WSE	WATER SURFACE ELEVATION

WATER SYMBOLS

SYMBOL EXIST.	SYMBOL PROP.	DESCRIPTION
		FIRE HYDRANT
		GATE VALVE
		WATER METER

SANITARY SEWER SYMBOLS

SYMBOL EXIST.	SYMBOL PROP.	DESCRIPTION
		MANHOLE
		CLEAN OUT

COMMUNICATION SYMBOLS

SYMBOL EXIST.	SYMBOL PROP.	DESCRIPTION
		TELEPHONE PEDESTAL
		TELEPHONE MANHOLE

CHANNELIZATION SYMBOLS

SYMBOL EXIST.	SYMBOL PROP.	DESCRIPTION
		LEFT TURN CHAN SYMBOL
		RIGHT TURN CHAN SYMBOL

GAS SYMBOLS

SYMBOL EXIST.	SYMBOL PROP.	DESCRIPTION
		GAS METER
		GAS VALVE

SURFACE SYMBOLS

SYMBOL EXIST.	SYMBOL PROP.	DESCRIPTION
		BOLLARD
		TRAFFIC SIGN
		TREE DECIDUOUS

DRAINAGE SYMBOLS

SYMBOL EXIST.	SYMBOL PROP.	DESCRIPTION
		MANHOLE
		CATCH BASIN

SURVEY SYMBOLS

SYMBOL	DESCRIPTION
	EXISTING MONUMENT
	NORTH ARROW
	SCALE BAR (20 0 20 40; scale feet)

LINETYPES

EXISTING	PROPOSED	DESCRIPTION
		CURB
		CHAIN LINK FENCE
		BUILDING
W	W	WATER LINE (SIZE AS NOTED)
S		SANITARY SEWER (SIZE AS NOTED)
SD		STORM DRAIN (SIZE AS NOTED)
		STORM DRAIN SWALE
G		GAS
T		UNDERGROUND TELEPHONE
P		UNDERGROUND POWER
OH/P		OVERHEAD POWER
STL		UNDERGROUND STREETLIGHT POWER
		EXISTING ROOF DRAINS TO REMAIN. ADJUST ALIGNMENT AND PROVIDE THROUGH–CURB OUTLET.

MISCELLANEOUS LINES AND HATCH PATTERNS

DESCRIPTION	TO BUILD	REMOVE
CONCRETE PAVEMENT		
CONCRETE SIDEWALK		
COLORED CONCRETE		
PERMEABLE PAVERS		
PLANTING AREA		
REMOVE PAINTLINE		
SAWCUT LINE		
UTILITY TO BE ABANDONED IN PLACE		
UTILITY TO BE ABANDONED BY REMOVAL		
TREE GRATE AND FRAME		
BENCH		
PUBLIC ART LOCATION		
BIKE RACK		
TRASH RECEPTACLE		
EXISTING LIGHT TO REMAIN		
PROPOSED LIGHT		

100% SUBMITTAL

MARK	REVISION DESCRIPTION	BY	APP.	DATE

FEDERAL AID NO.: TAP–6771 (001)
FEDERAL CONTRACT NO: TA–4635
STIP REFERENCE NO.: WA–04259
CITY OF LV PROJECT NO.: 13–2642–S

The City of Longview Washington

AMY BLAIN — STATE OF WASHINGTON — 39977 — REGISTERED PROFESSIONAL ENGINEER

DRAWN BY DRW
DESIGN BY DES
CHECK BY CHK
PROJ MGR DS

CITY OF LONGVIEW
DOWNTOWN STREETSCAPE DESIGN
LEGEND AND ABBREVIATIONS

DRAWING NO. G-3
PROJECT NO. VAVAN-12-108
DATE: 10/25/13
SHEET NO. 3 OF 49

Last Saved by: Juanita.rogers on: Jan 21, 2014 5:03 PM File: R:\Engineers\PROJECTS_ACTIVE PROJECTS\DOWNTOWN CORRIDOR IMPROVEMENTS\100% Design Documents - FINAL\2013-10-31 - Longview Downtown Streetscape - Civil and Landscape\01_G03.dwg

Copyright © BergerABAM, All Rights Reserved.

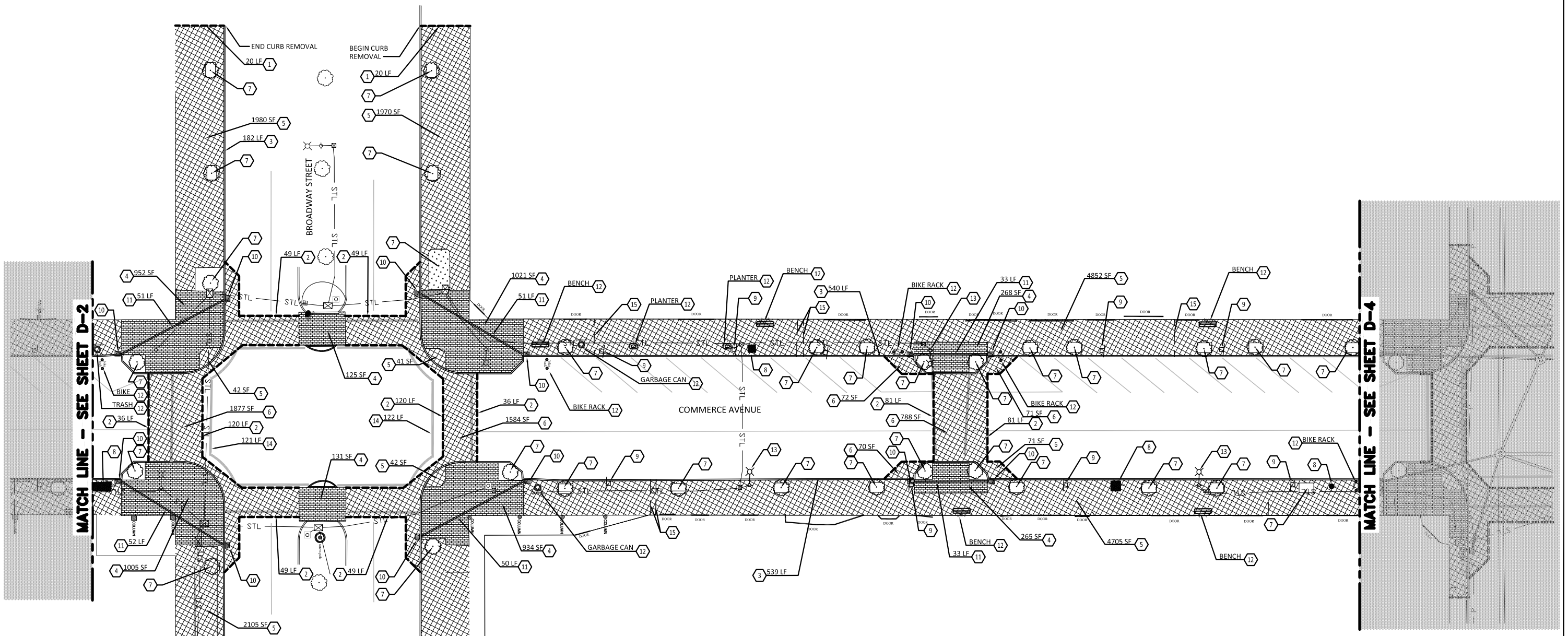

DEMOLITION NOTES:

1. SAWCUT CONCRETE SIDEWALK
2. SAWCUT CONCRETE PAVEMENT
3. REMOVE CONCRETE CURB
4. REMOVE PAVERS
5. REMOVE CONCRETE SIDEWALK
6. REMOVE CONCRETE PAVEMENT
7. REMOVE TREE PLANTER, INCLUDING BRICKS, TREE, IRON FENCING (WHERE NECESSARY) AND SOIL TO NATIVE SUB-GRADE
8. REMOVE, STAGE, AND RELOCATE ART
9. REMOVE AND RE-INSTALL STREET SIGN
10. REMOVE CATCH BASIN
11. REMOVE OR ABANDON STORM DRAIN. CAP AND FILL IF ABANDON IN PLACE
12. REMOVE STREET FURNISHING
13. REMOVE STREET LIGHT. SEE ILLUMINATION PLANS FOR RE-INSTALLED LIGHT POLES AND LOCATIONS.
14. REMOVE CROSSWALK STRIPES
15. EXISTING ROOF DRAINS TO REMAIN. ADJUST ALIGNMENT AND PROVIDE THROUGH-CURB OUTLET.

LEGEND:

- CONCRETE REMOVAL
- PAVER REMOVAL
- SAWCUT LINE

20 0 20 40
scale feet

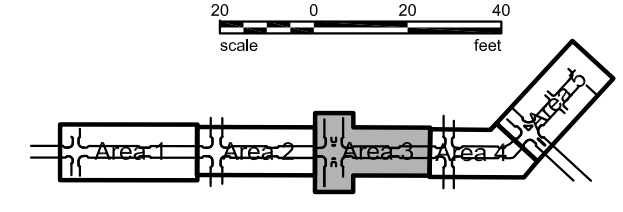

100% SUBMITTAL

MARK	REVISION DESCRIPTION	BY	APP.	DATE

FEDERAL AID NO.: TAP–6771 (001)
FEDERAL CONTRACT NO: TA–4635
STIP REFERENCE NO.: WA–04259
CITY OF LV PROJECT NO.: 13–2642–S

The City of Longview Washington

AMY BLAIN — STATE OF WASHINGTON — 39977 — REGISTERED PROFESSIONAL ENGINEER

DRAWN BY DRW
DESIGN BY DES
CHECK BY SA
PROJ MGR DS

CITY OF LONGVIEW
DOWNTOWN STREETSCAPE DESIGN
EXISTING CONDITIONS & DEMOLITION PLAN
AREA 3

DRAWING NO. D-3
PROJECT NO. VAVAN-12-108
DATE: 10/25/13
SHEET NO. 6 OF 49

Last Saved by: Amyb on: May 22, 2014 9:10 AM File: R:\Engineers\PROJECTS_ACTIVE PROJECTS\DOWNTOWN CORRIDOR IMPROVEMENTS\100% Design Documents - FINAL\2013-10-31 - Longview Downtown Streetscape - Civil and Landscape\02_D03 - REV01.dwg

Copyright © BergerABAM. All Rights Reserved.

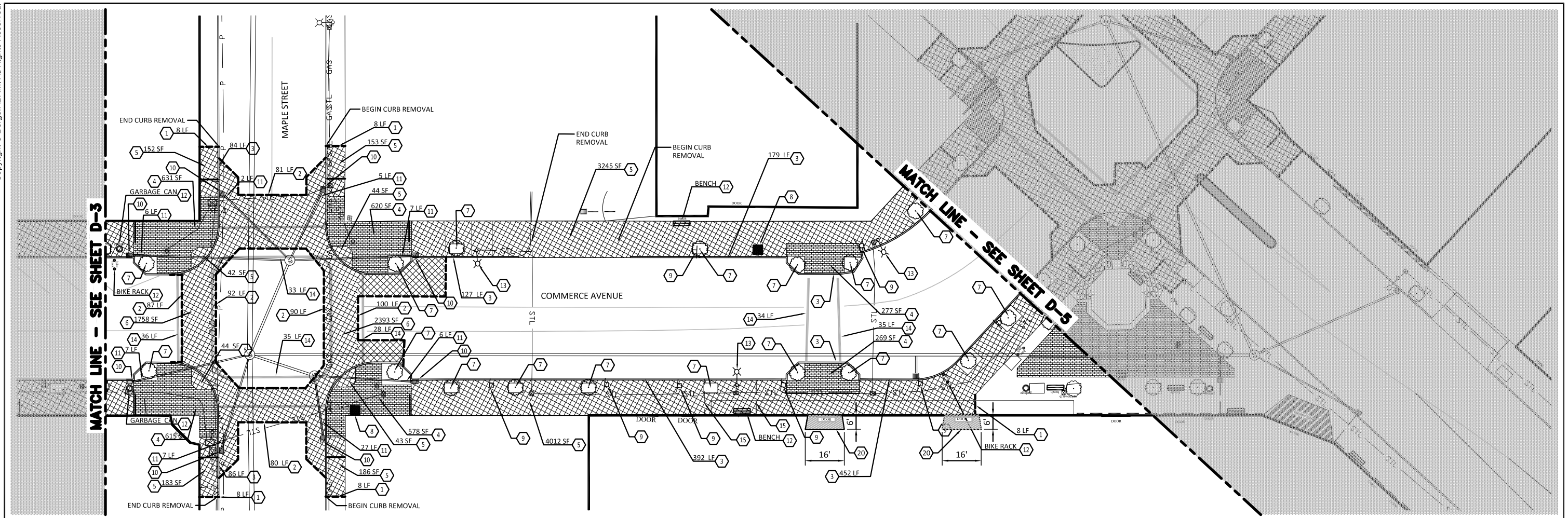

DEMOLITION NOTES:

1. SAWCUT CONCRETE SIDEWALK
2. SAWCUT CONCRETE PAVEMENT
3. REMOVE CONCRETE CURB
4. REMOVE PAVERS
5. REMOVE CONCRETE SIDEWALK
6. REMOVE CONCRETE PAVEMENT
7. REMOVE TREE PLANTER, INCLUDING BRICKS, TREE, IRON FENCING (WHERE NECESSARY) AND SOIL TO NATIVE SUB-GRADE
8. REMOVE, STAGE, AND RELOCATE ART
9. REMOVE AND RE-INSTALL STREET SIGN
10. REMOVE CATCH BASIN
11. REMOVE OR ABANDON STORM DRAIN. CAP AND FILL IF ABANDON IN PLACE
12. REMOVE STREET FURNISHING
13. REMOVE STREET LIGHT. SEE ILLUMINATION PLANS FOR RE-INSTALLED LIGHT POLES AND LOATIONS.
14. REMOVE CROSSWALK STRIPES
15. EXISTING ROOF DRAINS TO REMAIN. ADJUST ALIGNMENT AND PROVIDE THROUGH-CURB OUTLET.
20. GRIND & RE-SLOPE INSET CONCRETE ENTRY WAY, (2) LOCATIONS AT 1526 COMMERCE TO MEET ADA REQUIREMENT FOR 2% CROSS SLOPE. GRINDING NOT TO EXCEED 3" DEPTH. DUST CONTROL MEASURES REQUIRED.

LEGEND:

- CONCRETE REMOVAL
- PAVER REMOVAL
- SAWCUT LINE

20 0 20 40
scale feet

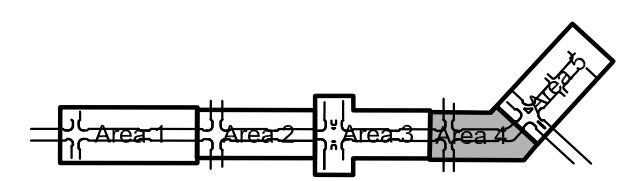

100% SUBMITTAL

MARK	REVISION DESCRIPTION	BY	APP.	DATE

FEDERAL AID NO.: TAP-6771 (001)
FEDERAL CONTRACT NO: TA-4635
STIP REFERENCE NO.: WA-04259
CITY OF LV PROJECT NO.: 13-2642-S

The City of Longview Washington

AMY BLAIN STATE OF WASHINGTON 39977 REGISTERED PROFESSIONAL ENGINEER

DRAWN BY DRW
DESIGN BY DES
CHECK BY SA
PROJ MGR DS

CITY OF LONGVIEW
DOWNTOWN STREETSCAPE DESIGN
EXISTING CONDITIONS & DEMOLITION PLAN
AREA 4

DRAWING NO. **D-4**
PROJECT NO. VAVAN-12-108
DATE: 10/25/13
SHEET NO. 7 OF 49

Last Saved by: Amyb on: May 22, 2014 11:33 AM File: R:\Engineers\PROJECTS_ACTIVE PROJECTS\DOWNTOWN CORRIDOR IMPROVEMENTS\100% Design Documents - FINAL\2013-10-31 - Longview Downtown Streetscape - Civil and Landscape\02_D04 - REV01.dwg

Copyright © BergerABAM. All Rights Reserved.

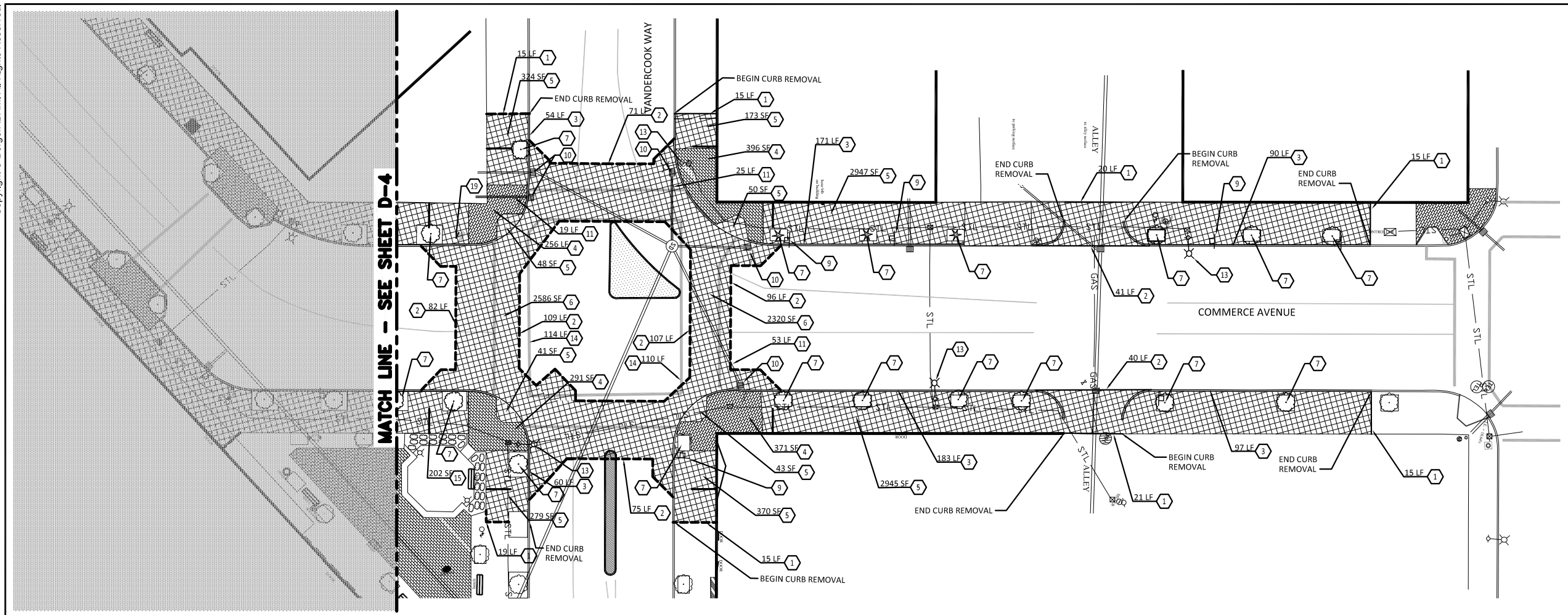

DEMOLITION NOTES:

1. SAWCUT CONCRETE SIDEWALK
2. SAWCUT CONCRETE PAVEMENT
3. REMOVE CONCRETE CURB
4. REMOVE PAVERS
5. REMOVE CONCRETE SIDEWALK
6. REMOVE CONCRETE PAVEMENT
7. REMOVE TREE PLANTER, INCLUDING BRICKS, TREE, IRON FENCING (WHERE NECESSARY) AND SOIL TO NATIVE SUB-GRADE
8. REMOVE, STAGE, AND RELOCATE ART
9. REMOVE AND RE-INSTALL STREET SIGN
10. REMOVE CATCH BASIN
11. REMOVE OR ABANDON STORM DRAIN. CAP AND FILL IF ABANDON IN PLACE
12. REMOVE STREET FURNISHING
13. REMOVE STREET LIGHT. SEE ILLUMINATION PLANS FOR REINSTALLED LIGHT POLE AND LOCATIONS.
14. REMOVE CROSSWALK STRIPES
15. CLEAR AND GRUB VEGETATION AREA
19. HISTORIC SIGN. REMOVE, STAGE, AND REINSTALL. SEE CIVIL PLANS.

LEGEND:

- CONCRETE REMOVAL
- PAVER REMOVAL
- SAWCUT LINE

20 0 20 40
scale feet

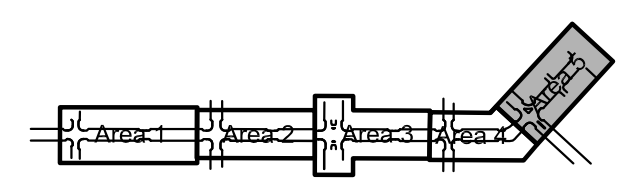

100% SUBMITTAL

MARK	REVISION DESCRIPTION	BY	APP.	DATE

FEDERAL AID NO.: TAP-6771 (001)
FEDERAL CONTRACT NO: TA-4635
STIP REFERENCE NO.: WA-04259
CITY OF LV PROJECT NO.: 13-2642-S

The City of Longview Washington

AMY BLAIN STATE OF WASHINGTON 39977 REGISTERED PROFESSIONAL ENGINEER

DRAWN BY DRW
DESIGN BY DES
CHECK BY SA
PROJ MGR DS

CITY OF LONGVIEW
DOWNTOWN STREETSCAPE DESIGN
EXISTING CONDITIONS & DEMOLITION PLAN
AREA 5

DRAWING NO. **D-5**
PROJECT NO. VAVAN-12-108
DATE: 10/25/13
SHEET NO. 8 OF 49

Last Saved by: Amyb on: Apr 21, 2014 3:42 PM File: R:\Engineers\PROJECTS_ACTIVE PROJECTS\DOWNTOWN CORRIDOR IMPROVEMENTS\100% Design Documents - FINAL\2013-10-31 - Longview Downtown Streetscape - Civil and Landscape\02_D05 - REV01.dwg

Copyright © BergerABAM. All Rights Reserved.

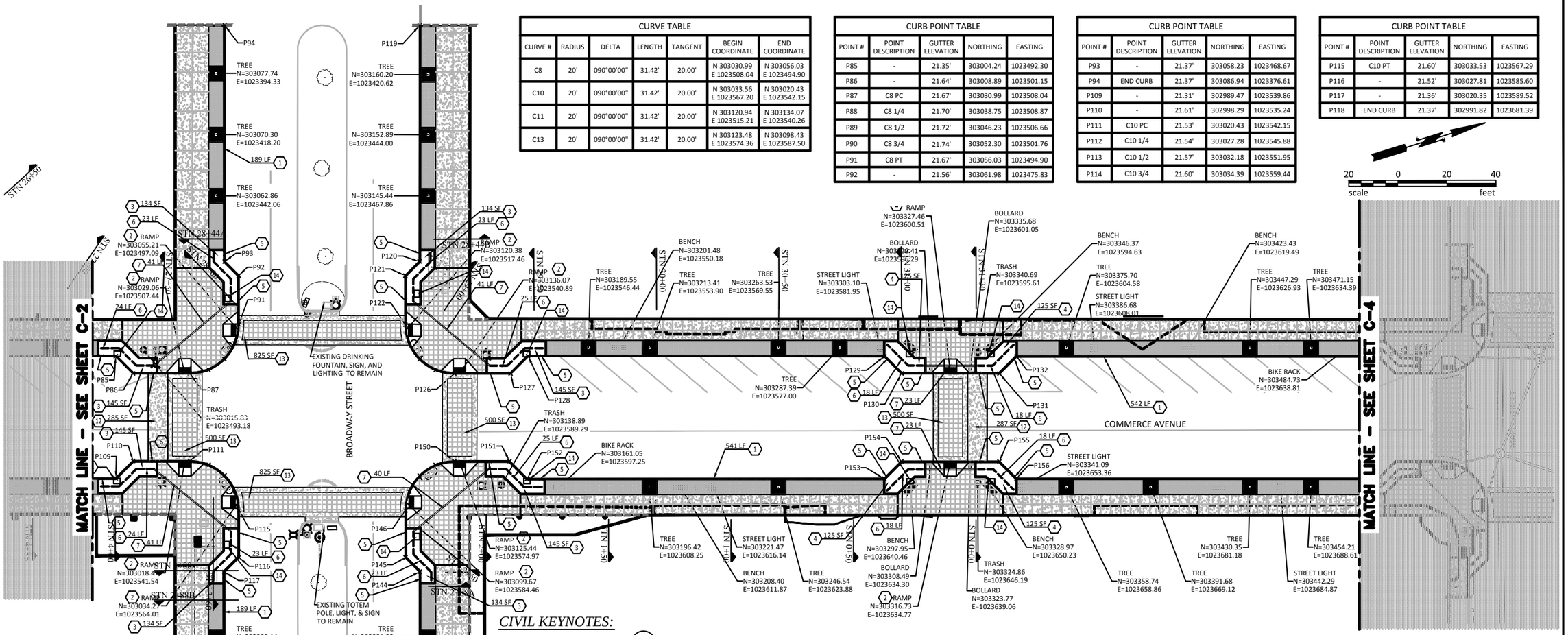

CURVE TABLE						
CURVE #	RADIUS	DELTA	LENGTH	TANGENT	BEGIN COORDINATE	END COORDINATE
C8	20'	090°00'00"	31.42'	20.00'	N 303030.99 E 1023508.04	N 303056.03 E 1023494.90
C10	20'	090°00'00"	31.42'	20.00'	N 303033.56 E 1023567.20	N 303020.43 E 1023542.15
C11	20'	090°00'00"	31.42'	20.00'	N 303120.94 E 1023515.21	N 303134.07 E 1023540.26
C13	20'	090°00'00"	31.42'	20.00'	N 303123.48 E 1023574.36	N 303098.43 E 1023587.50

CURB POINT TABLE				
POINT #	POINT DESCRIPTION	GUTTER ELEVATION	NORTHING	EASTING
P85	-	21.35'	303004.24	1023492.30
P86	-	21.64'	303008.89	1023501.15
P87	C8 PC	21.67'	303030.99	1023508.04
P88	C8 1/4	21.70'	303038.75	1023508.87
P89	C8 1/2	21.72'	303046.23	1023506.66
P90	C8 3/4	21.74'	303052.30	1023501.76
P91	C8 PT	21.67'	303056.03	1023494.90
P92	-	21.56'	303061.98	1023475.83

CURB POINT TABLE				
POINT #	POINT DESCRIPTION	GUTTER ELEVATION	NORTHING	EASTING
P93	-	21.37'	303058.23	1023468.67
P94	END CURB	21.37'	303086.94	1023376.61
P109	-	21.31'	302989.47	1023539.86
P110	-	21.61'	302998.29	1023535.24
P111	C10 PC	21.53'	303020.43	1023542.15
P112	C10 1/4	21.54'	303027.28	1023545.88
P113	C10 1/2	21.57'	303032.18	1023551.95
P114	C10 3/4	21.60'	303034.39	1023559.44

CURB POINT TABLE				
POINT #	POINT DESCRIPTION	GUTTER ELEVATION	NORTHING	EASTING
P115	C10 PT	21.60'	303033.53	1023567.29
P116	-	21.52'	303027.81	1023585.60
P117	-	21.36'	303020.35	1023589.52
P118	END CURB	21.37'	302991.82	1023681.39

CURB POINT TABLE				
POINT #	POINT DESCRIPTION	GUTTER ELEVATION	NORTHING	EASTING
P119	BEGIN CURB	21.40'	303162.86	1023400.39
P120	-	21.39'	303134.13	1023492.33
P121	-	21.53'	303126.90	1023496.11
P122	C11 PC	21.55'	303120.94	1023515.21
P123	C11 1/4	21.59'	303120.11	1023522.97
P124	C11 1/2	21.62'	303122.32	1023530.45
P125	C11 3/4	21.71'	303127.22	1023536.53
P126	C11 PT	21.70'	303134.07	1023540.26
P127	-	21.59'	303156.04	1023547.12
P128	-	21.32'	303164.98	1023542.44

CURB POINT TABLE				
POINT #	POINT DESCRIPTION	GUTTER ELEVATION	NORTHING	EASTING
P129	-	21.01'	303303.78	1023585.79
P130	-	21.34'	303308.38	1023594.55
P131	-	21.20'	303346.56	1023606.48
P132	-	20.95'	303355.33	1023601.88
P143	BEGIN	21.46'	303067.83	1023705.05
P144	-	21.45'	303096.54	1023613.18
P145	-	21.60'	303092.71	1023605.88
P146	C13 PC	21.65'	303098.44	1023587.51
P147	C13 1/4	21.66'	303102.16	1023580.65
P148	C13 1/2	21.70'	303108.24	1023575.75

CURB POINT TABLE				
POINT #	POINT DESCRIPTION	GUTTER ELEVATION	NORTHING	EASTING
P149	C13 3/4	21.74'	303115.72	1023573.54
P150	C13 PT	21.70'	303123.48	1023574.36
P151	-	21.68'	303144.98	1023581.06
P152	-	21.42'	303149.68	1023590.04
P153	-	21.12'	303288.87	1023633.42
P154	-	21.34'	303297.63	1023628.82
P155	-	21.16'	303335.82	1023640.72
P156	-	20.95'	303340.42	1023649.48

CIVIL KEYNOTES:

1. CEMENT CONCRETE TRAFFIC CURB (2/C-7)
2. CEMENT CONCRETE CURB RAMP, PER CITY OF LONGVIEW STANDARD DETAIL ST-140 AND LOCATE AS INDICATED ON DETAILS (1/C-6) (2/C-6)
3. INTERSECTION RAIN GARDEN (1/C-6)
4. MID-BLOCK RAIN GARDEN (2/C-6)
5. RAIN GARDEN INLET (4/C-7)
6. UNDERDRAIN PIPE 6 IN. DIAM.
7. DRAIN PIPE 6 IN. DIAM.
12. COLORED CONCRETE PAVEMENT (6/C-7)
13. COLORED PERVIOUS CROSSWALK (1/LA-8)
14. EXISTING CATCH BASINS, TYP - REMOVED

GENERAL NOTES:

1. REFERENCE CITY OF LONGVIEW STD PLAN ST-060 AND WSDOT STD PLAN A-40.10-02 FOR CONCRETE PAVEMENT CONSTRUCTION JOINTS. JOINTS SHALL ALIGN WITH EXISTING STREET JOINTS TO THE EXTENT POSSIBLE.
2. REFERENCE CITY OF LONGVIEW STD PLAN ST-090 FOR CURB CONSTRUCTION. JOINTS SHALL ALIGN WITH EXISTING STREET JOINTS TO THE EXTENT POSSIBLE.
3. REFERENCE CITY OF LONGVIEW STD PLAN ST-140 FOR CURB RAMP DETAIL AND MAXIMUM RAMP SLOPES.
4. REFERENCE CITY OF LONGVIEW STD PLAN ST-150 FOR SIDEWALK DETAILS.
5. TOP OF CURB ELEVATION SHALL BE 6-INCHES ABOVE GUTTER ELEVATION.
6. SEE DRAWING NO. C-6 FOR RAIN GARDEN INLET TYPICAL LOCATIONS.

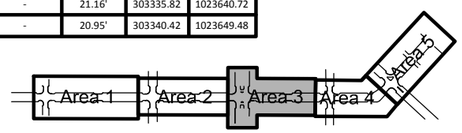

100% SUBMITTAL

MARK	REVISION DESCRIPTION	BY	APP.	DATE

FEDERAL AID NO.: TAP-6771 (001)
FEDERAL CONTRACT NO: TA-4635
STIP REFERENCE NO.: WA-04259
CITY OF LV PROJECT NO.: 13-2642-S

The City of Longview Washington

AMY BLAIN — STATE OF WASHINGTON — 39977 — REGISTERED PROFESSIONAL ENGINEER

DRAWN BY JRB
DESIGN BY SEE
CHECK BY SA
PROJ MGR DS

CITY OF LONGVIEW
DOWNTOWN STREETSCAPE DESIGN
CIVIL PLAN
AREA 3

DRAWING NO. C-3
PROJECT NO. VAVAN-12-108
DATE: 10/25/13
SHEET NO. 11 OF 49

Last Saved by: Amyb on: Jun 9, 2014 12:25 PM File: R:\Engineers\PROJECTS_ACTIVE PROJECTS\DOWNTOWN CORRIDOR IMPROVEMENTS\100% Design Documents - FINAL\20113-10-31 - Longview Downtown Streetscape - Civil and Landscape\03_C03 - REV01.dwg

Copyright © BergerABAM. All Rights Reserved.

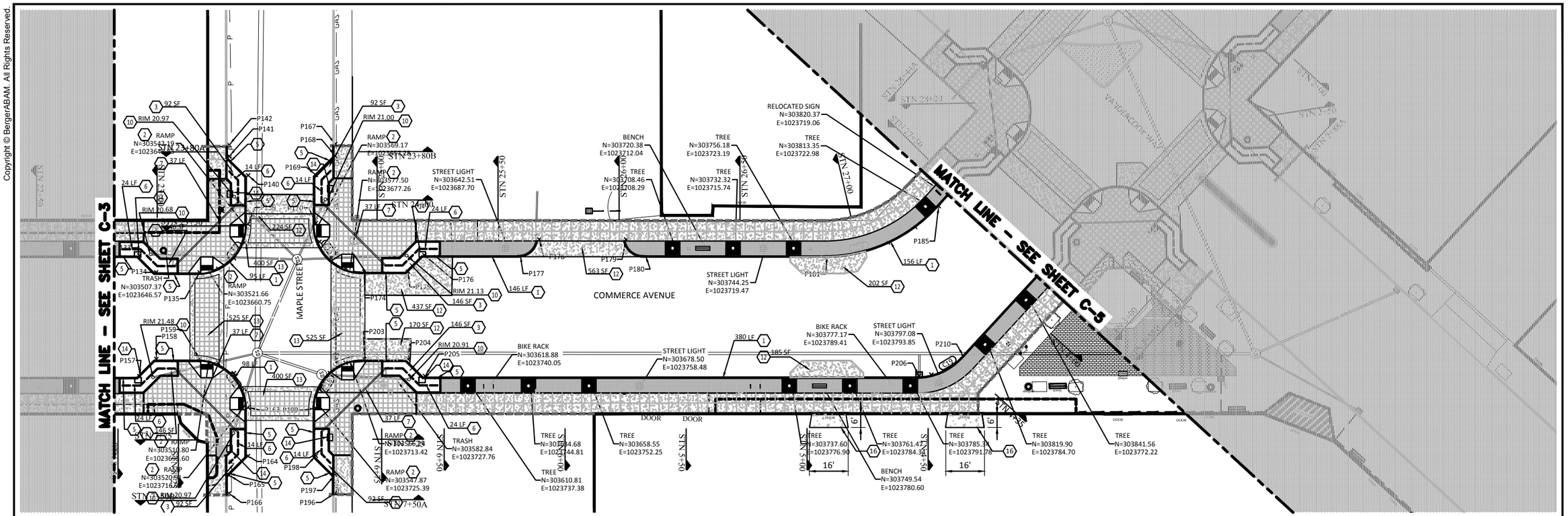

CIVIL KEYNOTES:

1. CEMENT CONCRETE TRAFFIC CURB (2/C-7)
2. CEMENT CONCRETE CURB RAMP, PER CITY OF LONGVIEW STANDARD DETAIL ST-140 AND LOCATE AS INDICATED ON DETAILS (1/C-6)
3. INTERSECTION RAIN GARDEN (1/C-6) (2/C-6)
5. RAIN GARDEN INLET (4/C-7)
6. UNDERDRAIN PIPE 6 IN. DIAM.
7. DRAIN PIPE 6 IN. DIAM.
10. RAIN GARDEN OVERFLOW DRAIN (5/C-7)
12. COLORED CONCRETE PAVEMENT (6/C-7)
13. PERVIOUS COLOR CONCRETE CROSSWALK (1/LA-8)
14. EXISTING CATCH BASINS - TYP. REMOVED
16. GRIND & RE-SLOPE INSET CONCRETE ENTRY WAY, (2) LOCATIONS AT 1526 COMMERCE TO MEET ADA REQUIREMENTS FOR 2% CROSS SLOPE. GRINDING NOT TO EXCEED 3" DEPTH. DUST CONTROL MEASURES REQUIRED.

GENERAL NOTES:

1. REFERENCE CITY OF LONGVIEW STD PLAN ST-060 AND WSDOT STD PLAN A-40.10-02 FOR CONCRETE PAVEMENT CONSTRUCTION JOINTS. JOINTS SHALL ALIGN WITH EXISTING STREET JOINTS TO THE EXTENT POSSIBLE.
2. REFERENCE CITY OF LONGVIEW STD PLAN ST-090 FOR CURB CONSTRUCTION. JOINTS SHALL ALIGN WITH EXISTING STREET JOINTS TO THE EXTENT POSSIBLE.
3. REFERENCE CITY OF LONGVIEW STD PLAN ST-140 FOR CURB RAMP DETAIL AND MAXIMUM RAMP SLOPES.
4. REFERENCE CITY OF LONGVIEW STD PLAN ST-150 FOR SIDEWALK DETAILS.
5. TOP OF CURB ELEVATION SHALL BE 6-INCHES ABOVE GUTTER ELEVATION.
6. SEE DRAWING NO. C-6 FOR RAIN GARDEN INLET TYPICAL LOCATIONS.

CURVE TABLE

CURVE #	RADIUS	DELTA	LENGTH	TANGENT	BEGIN COORDINATE	END COORDINATE
C12	20'	090°00'53"	31.42'	20.00'	N 303517.88 E 1023659.96	N 303542.93 E 1023646.83
C14	20'	090°00'00"	31.42'	20.00'	N 303520.37 E 1023719.13	N 303507.22 E 1023694.08
C15	20'	090°00'00"	31.42'	20.00'	N 303569.77 E 1023654.83	N 303582.90 E 1023679.89
C16	63'	047°32'32"	51.86'	27.53'	N 303767.48 E 1023730.39	N 303817.55 E 1023724.74
C18	20'	090°00'00"	31.42'	20.00'	N 303572.14 E 1023714.32	N 303547.10 E 1023727.47
C19	25'	047°15'14"	20.62'	10.94'	N 303788.93 E 1023789.23	N 303808.84 E 1023787.03

CURB POINT TABLE

POINT #	POINT DESCRIPTION	GUTTER ELEVATION	NORTHING	EASTING
P133	-	20.68'	303496.14	1023645.86
P134	-	21.04'	303500.73	1023654.61
P135	C12 PC	21.07'	303517.88	1023659.96
P136	C12 1/4	21.20'	303525.64	1023660.79
P137	C12 1/2	21.23'	303533.13	1023658.59
P138	C12 3/4	21.22'	303539.20	1023653.68
P139	C12 PT	21.25'	303542.93	1023646.83
P140	-	21.05'	303548.92	1023627.65
P141	-	20.97'	303543.78	1023617.83
P142	END	20.99'	303545.19	1023613.31
P157	-	20.84'	303481.33	1023693.40
P158	-	20.97'	303490.16	1023688.77
P159	C14 PC	21.09'	303507.22	1023694.08
P160	C14 1/4	21.20'	303514.08	1023697.81
P161	C14 1/2	21.25'	303518.98	1023703.88
P162	C14 3/4	21.16'	303521.19	1023711.37
P163	C14 PT	21.07'	303520.37	1023719.13
P164	-	20.97'	303514.40	1023738.28
P165	-	21.00'	303504.56	1023743.44
P166	END CURB	21.02'	303502.31	1023750.66

CURB POINT TABLE

POINT #	POINT DESCRIPTION	GUTTER ELEVATION	NORTHING	EASTING
P167	BEGIN CURB	21.05'	303587.10	1023626.06
P168	-	21.00'	303585.67	1023630.63
P169	-	21.14'	303575.69	1023635.85
P170	C15 PC	21.27'	303569.77	1023654.83
P171	C15 1/4	21.25'	303568.94	1023662.59
P172	C15 1/2	21.26'	303571.14	1023670.08
P173	C15 3/4	21.22'	303576.05	1023676.15
P174	C15 PT	21.31'	303582.90	1023679.89
P175	-	21.43'	303600.18	1023685.28
P176	-	21.13'	303608.71	1023680.81
P177	-	20.91'	303646.48	1023692.61
P178	-	20.96'	303655.92	1023688.74
P179		21.69'	303690.11	1023699.42
P180	-	21.69'	303695.82	1023708.01
P181	C16 PC	21.36'	303767.48	1023730.39
P182	C16 1/4	21.36'	303780.17	1023732.94
P183	C16 1/2	21.20'	303793.11	1023732.83
P184	C16 3/4	21.12'	303805.75	1023730.06
P185	C16 PT	21.05'	303817.55	1023724.74
P196	BEGIN CURB	20.95'	303544.14	1023763.52

CURB POINT TABLE

POINT #	POINT DESCRIPTION	GUTTER ELEVATION	NORTHING	EASTING
P197	-	20.88'	303546.37	1023756.36
P198	-	21.07'	303541.18	1023746.46
P199	C18 PC	21.25'	303547.03	1023727.74
P200	C18 1/4	21.33'	303550.74	1023720.72
P201	C18 1/2	21.24'	303556.90	1023715.71
P202	C18 3/4	21.17'	303564.38	1023713.50
P203	C18 PT	21.30'	303572.14	1023714.32
P204	-	20.91'	303589.47	1023719.72
P205	-	21.00'	303594.07	1023728.49
P206	C19 PC	21.04'	303788.93	1023789.23
P207	C19 1/4	21.15'	303793.97	1023790.25
P208	C19 1/2	21.34'	303799.12	1023790.21
P209	C19 3/4	21.50'	303804.15	1023789.12
P210	C19 PT	22.06'	303808.84	1023787.03

20 0 20 40
scale feet

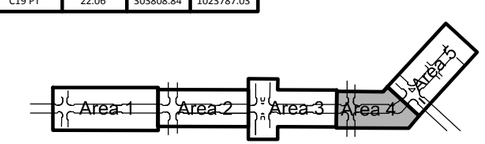

100% SUBMITTAL

MARK	REVISION DESCRIPTION	BY	APP.	DATE

FEDERAL AID NO.: TAP-6771 (001)
FEDERAL CONTRACT NO: TA-4635
STIP REFERENCE NO.: WA-04259
CITY OF LV PROJECT NO.: 13-2642-S

The City of Longview Washington

AMY BLAIN — STATE OF WASHINGTON — 39977 — REGISTERED PROFESSIONAL ENGINEER

DRAWN BY JRB
DESIGN BY SEE
CHECK BY SA
PROJ MGR DS

CITY OF LONGVIEW
DOWNTOWN STREETSCAPE DESIGN
CIVIL PLAN
AREA 4

DRAWING NO. C-4
PROJECT NO. VAVAN-12-108
DATE: 10/25/13
SHEET NO. 12 OF 49

Last Saved by: Amyb on: May 22, 2014 2:00 PM File: P:\Engineers\PROJECTS_ACTIVE PROJECTS\DOWNTOWN CORRIDOR IMPROVEMENTS\100% Design Documents - FINAL\2013-10-31 - Longview Downtown Streetscape - Civil and Landscape\03_C04 - REV01.dwg

Copyright © BergerABAM. All Rights Reserved.

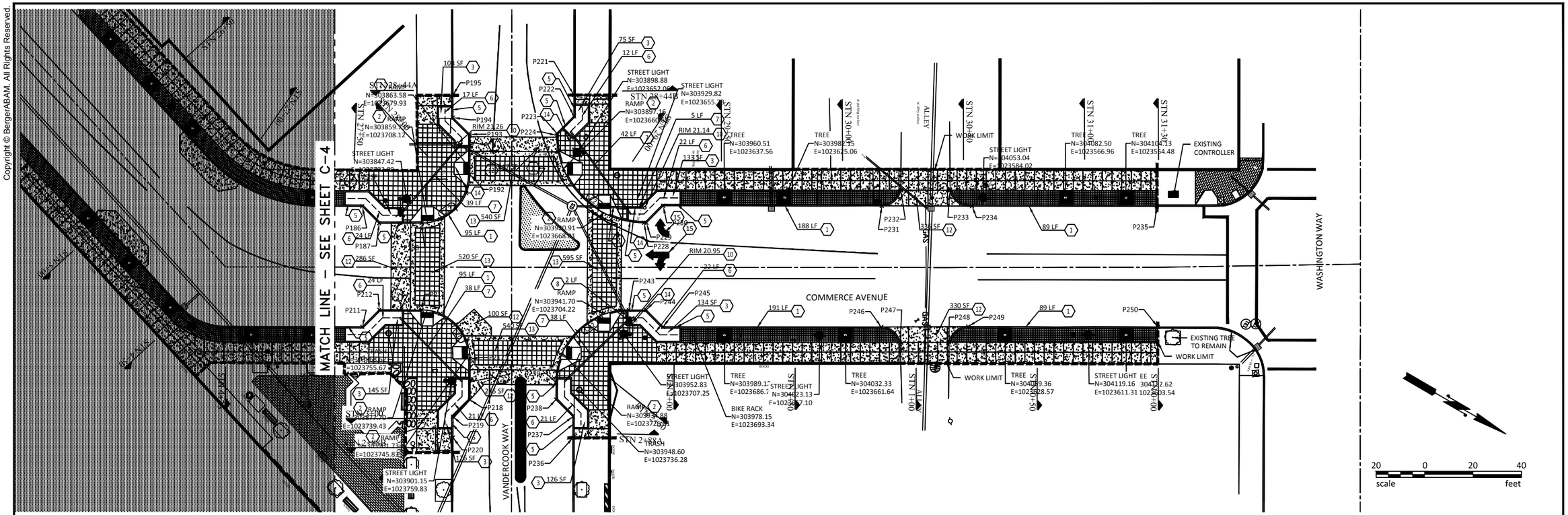

CIVIL KEYNOTES:

1. CEMENT CONCRETE TRAFFIC CURB (2/C-7)
2. CEMENT CONCRETE CURB RAMP, PER CITY OF LONGVIEW STANDARD DETAIL ST-140 AND LOCATE AS INDICATED ON DETAILS (1/C-6) (2/C-6)
3. INTERSECTION RAIN GARDEN (1/C-6)
5. RAIN GARDEN INLET (4/C-7)
6. UNDERDRAIN PIPE 6 IN. DIAM.
7. DRAIN PIPE 6 IN. DIAM.
8. DRAIN PIPE 8 IN. DIAM.
10. RAIN GARDEN OVERFLOW DRAIN (5/C-7)
12. COLORED CONCRETE PAVEMENT (6/C-7)
13. COLORED PERVIOUS CONCRETE CROSSWALK (1/LA-8)
15. PROPOSED TURN ARROWS. USE PRE-FORMED THERMOPLATIC TYPE 'B' HEAT APPLIED MATERIAL

GENERAL NOTES:

1. REFERENCE CITY OF LONGVIEW STD PLAN ST-060 AND WSDOT STD PLAN A-40.10-02 FOR CONCRETE PAVEMENT CONSTRUCTION JOINTS. JOINTS SHALL ALIGN WITH EXISTING STREET JOINTS TO THE EXTENT POSSIBLE.
2. REFERENCE CITY OF LONGVIEW STD PLAN ST-090 FOR CURB CONSTRUCTION. JOINTS SHALL ALIGN WITH EXISTING STREET JOINTS TO THE EXTENT POSSIBLE.
3. REFERENCE CITY OF LONGVIEW STD PLAN ST-140 FOR CURB RAMP DETAIL AND MAXIMUM RAMP SLOPES.
4. REFERENCE CITY OF LONGVIEW STD PLAN ST-150 FOR SIDEWALK DETAILS.
5. TOP OF CURB ELEVATION SHALL BE 6-INCHES ABOVE GUTTER ELEVATION.
6. SEE DRAWING NO. C-6 FOR RAIN GARDEN INLET TYPICAL LOCATIONS.

CURVE TABLE

CURVE #	RADIUS	DELTA	LENGTH	TANGENT	BEGIN COORDINATE	END COORDINATE
C17	20'	090°00'00"	31.42'	20.00'	N 303857.66 E 1023709.50	N 303864.88 E 1023682.15
C20	20'	090°00'00"	31.42'	20.00'	N 303903.02 E 1023747.78	N 303875.71 E 1023740.44
C21	36'	090°00'00"	56.55'	36.00'	N 303887.90 E 1023650.19	N 303937.12 E 1023663.20
C22	30'	090°00'00"	47.12'	30.00'	N 303949.66 E 1023697.53	N 303938.74 E 1023738.52

CURB POINT TABLE

POINT #	POINT DESCRIPTION	GUTTER ELEVATION	NORTHING	EASTING
P186	-	21.25'	303832.96	1023715.77
P187		21.30'	303842.54	1023718.30
P188	C17 PC	21.33'	303857.68	1023709.49
P189	C17 1/4	21.29'	303863.51	1023704.33
P190	C17 1/2	21.29'	303866.94	1023697.32
P191	C17 3/4	21.28'	303867.42	1023689.53
P192	C17 PT	21.37'	303864.83	1023682.09
P193	-	21.26'	303856.57	1023667.86
P194	-	21.28'	303847.05	1023665.35
P195	END CURB	20.91'	303842.38	1023657.32
P211	-	22.02'	303857.97	1023758.73
P212	-	22.04'	303860.54	1023749.17
P213	C20 PC	22.06'	303875.71	1023740.44
P214	C20 1/4	22.03'	303883.10	1023737.93
P215	C20 1/2	21.94'	303890.88	1023738.45
P216	C20 3/4	21.86'	303897.88	1023741.91
P217	C20 PT	21.74'	303903.02	1023747.78
P218	-	21.63'	303911.50	1023762.51
P219	-	21.56'	303908.93	1023772.04
P220	END CURB	21.11'	303913.26	1023779.54

CURB POINT TABLE

POINT #	POINT DESCRIPTION	GUTTER ELEVATION	NORTHING	EASTING
P221	BEGIN CURB	21.11'	303885.62	1023632.22
P222	-	21.37'	303889.99	1023639.73
P223	-	21.37'	303887.44	1023649.39
P224	C21 PC	21.29'	303887.90	1023650.19
P225	C21 1/4	21.19'	303897.20	1023660.72
P226	C21 1/2	21.27'	303909.81	1023666.89
P227	C21 3/4	21.34'	303923.83	1023667.76
P228	C21 PT	21.36'	303937.12	1023663.20
P229	-	21.15'	303937.92	1023662.74
P230	-	21.14'	303940.44	1023653.23
P231	-	20.78'	304018.58	1023607.94
P232	-	20.80'	304022.12	1023598.47
P233	-	21.08'	304039.73	1023588.27
P234	-	21.08'	304050.84	1023589.31
P235	END CURB	21.15'	304116.96	1023551.10
P236	BEGIN CURB	21.18'	303956.21	1023754.72
P237	-	21.10'	303951.81	1023747.13
P238	-	20.98'	303942.25	1023744.58
P239	C22 PC	20.95'	303938.74	1023738.52
P240	C22 1/4	20.95'	303934.96	1023727.45

CURB POINT TABLE

POINT #	POINT DESCRIPTION	GUTTER ELEVATION	NORTHING	EASTING
P241	C22 1/2	20.98'	303935.71	1023715.76
P242	C22 3/4	20.98'	303940.87	1023705.26
P243	C22 PT	20.98'	303949.66	1023697.53
P244	-	20.98'	303955.87	1023693.93
P245	-	20.98'	303965.44	1023696.48
P246	-	20.98'	304043.41	1023651.30
P247	-	20.98'	304053.38	1023652.88
P248	-	20.98'	304070.83	1023642.73
P249	-	20.98'	304074.38	1023633.17
P250	END CURB	20.98'	304142.24	1023593.98

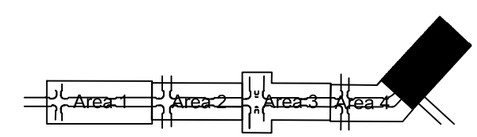

100% SUBMITTAL

MARK	REVISION DESCRIPTION	BY	APP.	DATE

FEDERAL AID NO.: TAP–6771 (001)
FEDERAL CONTRACT NO: TA–4635
STIP REFERENCE NO.: WA–04259
CITY OF LV PROJECT NO.: 13–2642–S

The City of Longview Washington

AMY BLAIN — STATE OF WASHINGTON — 39977 — REGISTERED PROFESSIONAL ENGINEER

DRAWN BY JRB
DESIGN BY SEE
CHECK BY SA
PROJ MGR DS

CITY OF LONGVIEW
DOWNTOWN STREETSCAPE DESIGN
CIVIL PLAN
AREA 5

DRAWING NO. C-5
PROJECT NO. VAVAN-12-108
DATE: 10/25/13
SHEET NO. 13 OF 49

Last Saved by: Amyb on: May 29, 2014 1:44 PM File: R:\Engineers\PROJECTS_ACTIVE PROJECTS\DOWNTOWN CORRIDOR IMPROVEMENTS\100% Design Documents - FINAL\2013-10-31 - Longview Downtown Streetscape - Civil and Landscape\03_C05 - REV01.dwg

Copyright © BergerABAM. All Rights Reserved.

TABLE: DIMENSIONS DIFFERENT FROM TYPICAL

CORNER OF HEMLOCK AND COMMERCE	
SOUTWEST CORNER, COMMERCE AVENUE	A = 7'-0"
SOUTHWEST CORNER, HEMLOCK STREET	D = 4'-0"
NORTHWEST CORNER, HEMLOCK STREET	D = 4'-0"
NORTHEAST CORNER, HEMLOCK STREET	D = 4'-0"
CORNER OF MAPLE AND COMMERCE	
MAPLE STREET	C = 0'-0"
MAPLE STREET	D = 0'-0"
CORNER OF VANDERCOOK AND COMMERCE	
SOUTHWEST CORNER, VANDERCOOK	B = 5'-0"
NORTHWEST CORNER, VANDERCOOK	B = 0'-0"
NORTHWEST CORNER, COMMERCE AVENUE	A = 8'-0"
SOUTHEAST CORNER, VANDERCOOK	B = 9'-0"
NORTHEAST CORNER, VANDERCOOK	B = 9'-0"

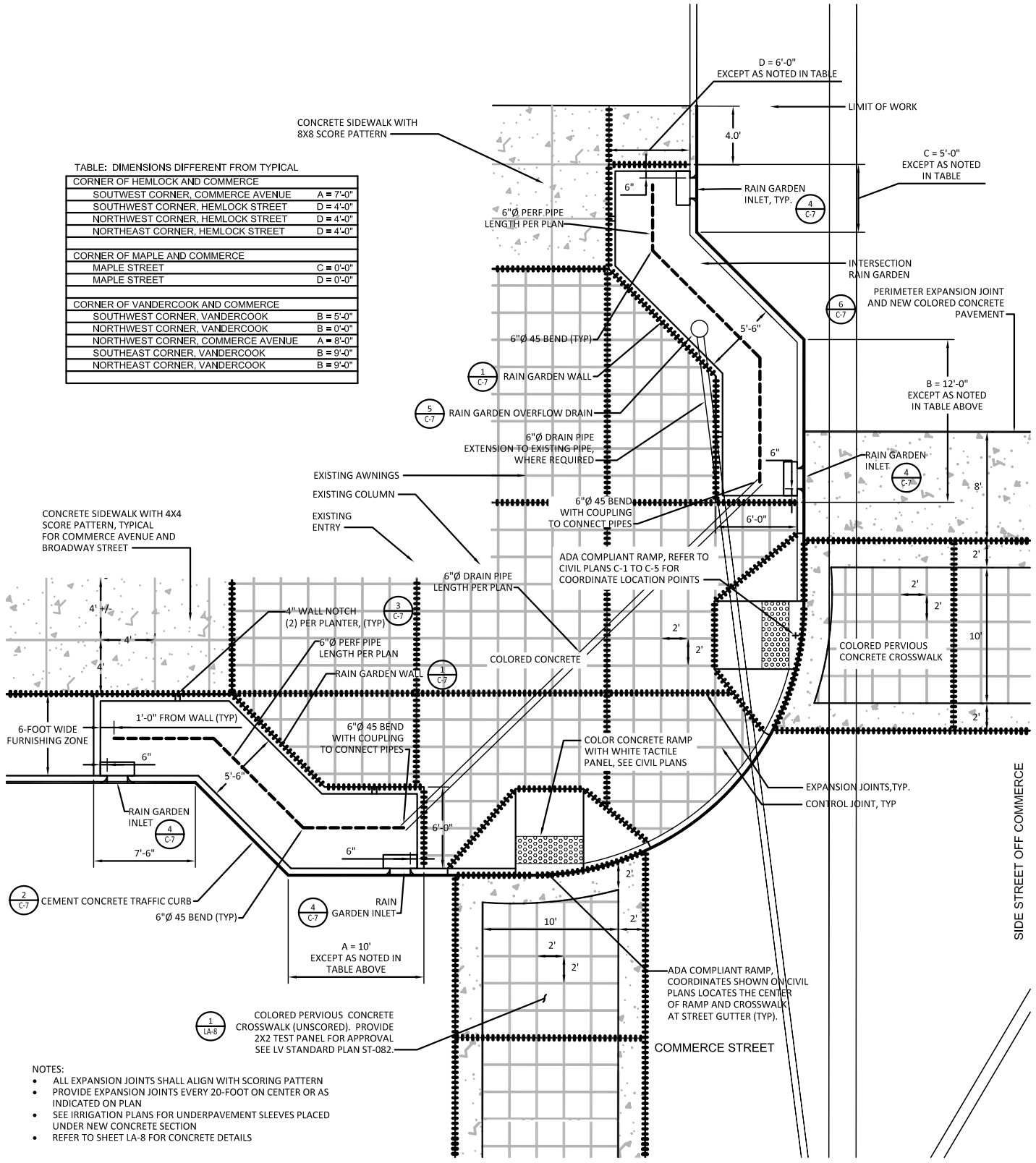

NOTES:
- ALL EXPANSION JOINTS SHALL ALIGN WITH SCORING PATTERN
- PROVIDE EXPANSION JOINTS EVERY 20-FOOT ON CENTER OR AS INDICATED ON PLAN
- SEE IRRIGATION PLANS FOR UNDERPAVEMENT SLEEVES PLACED UNDER NEW CONCRETE SECTION
- REFER TO SHEET LA-8 FOR CONCRETE DETAILS

1 TYPICAL INTERSECTION PLANTERS
SCALE: 1"=5'

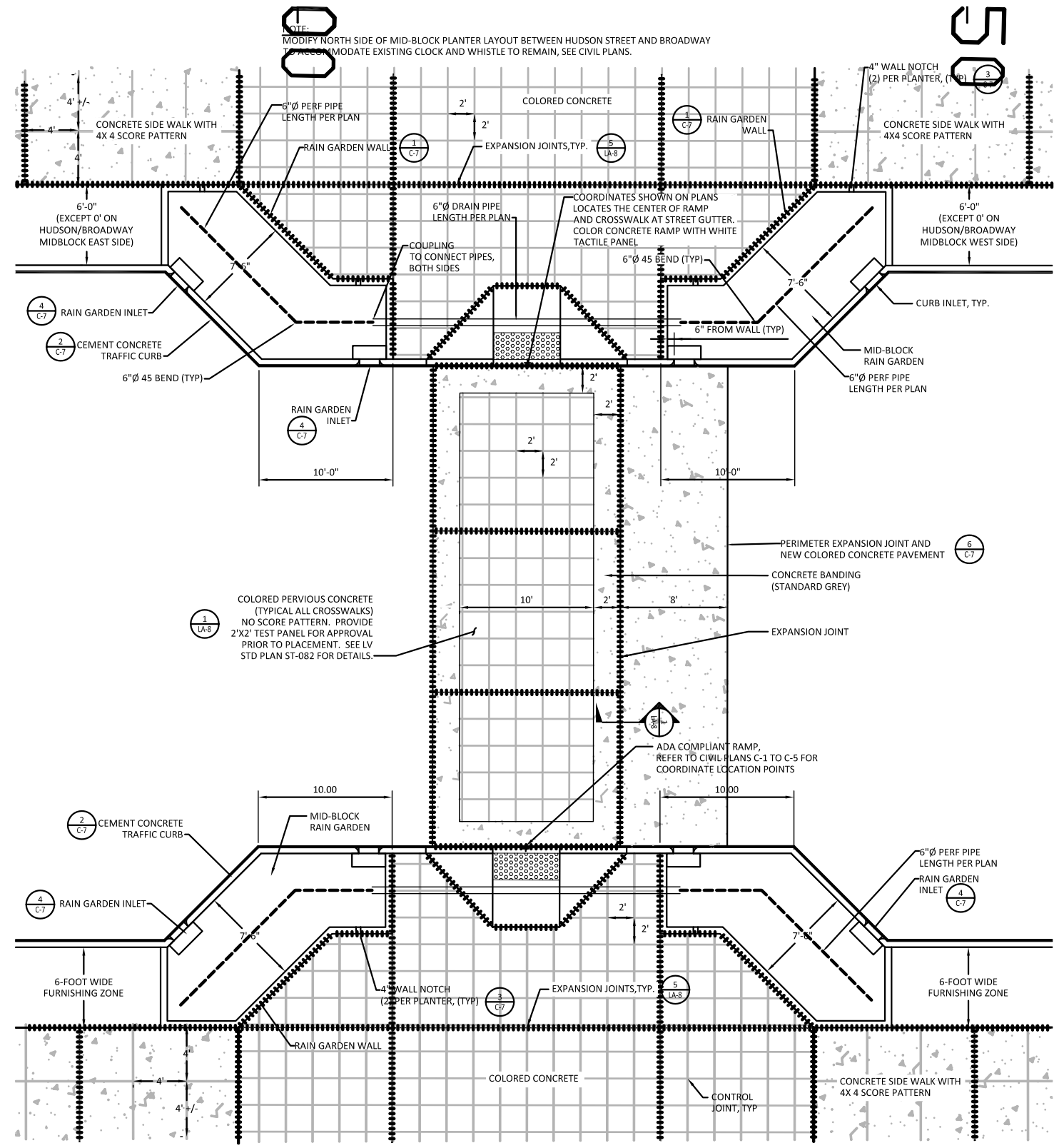

2 TYPICAL MID-BLOCK PLANTERS
SCALE: 1"=5'

100% SUBMITTAL

MARK	REVISION DESCRIPTION	BY	APP.	DATE

FEDERAL AID NO.: TAP–6771 (001)
FEDERAL CONTRACT NO: TA–4635
STIP REFERENCE NO.: WA–04259
CITY OF LV PROJECT NO.: 13–2642–S

The City of Longview Washington

AMY BLAIN — STATE OF WASHINGTON — 39977 — REGISTERED PROFESSIONAL ENGINEER

DRAWN BY JRB
DESIGN BY SEE
CHECK BY SA
PROJ MGR DS

CITY OF LONGVIEW
DOWNTOWN STREETSCAPE DESIGN
CIVIL DETAILS
INTERSECTION & MID-BLOCK ENLARGEMENTS

DRAWING NO. C-6
PROJECT NO. VAVAN-12-108
DATE: 10/25/13
SHEET NO. 14 OF 49

Last Saved by: Amyb on: Apr 17, 2014 10:25 AM File: R:\Engineers\PROJECTS_ACTIVE PROJECTS\DOWNTOWN CORRIDOR IMPROVEMENTS\100% Design Documents - FINAL\2013-10-31 - Longview Downtown Streetscape - Civil and Landscape\03_C06 - REV01.dwg

Copyright © BergerABAM. All Rights Reserved.

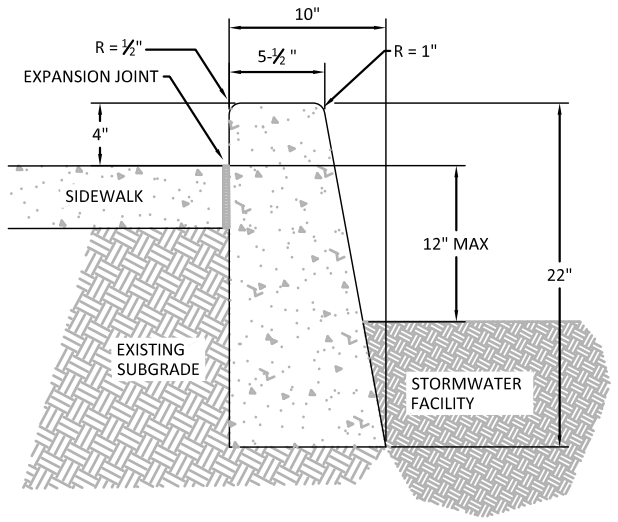

1 - RAIN GARDEN WALL
NTS

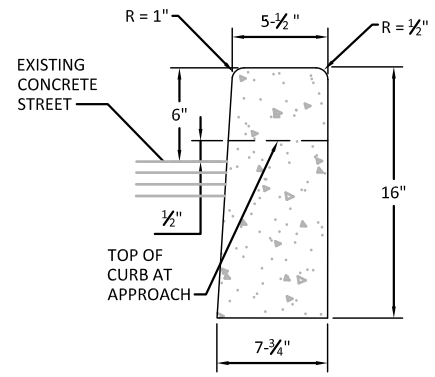

NOTE: SEE LONGVIEW STANDARD PLAN ST-090

2 - CURB
NTS

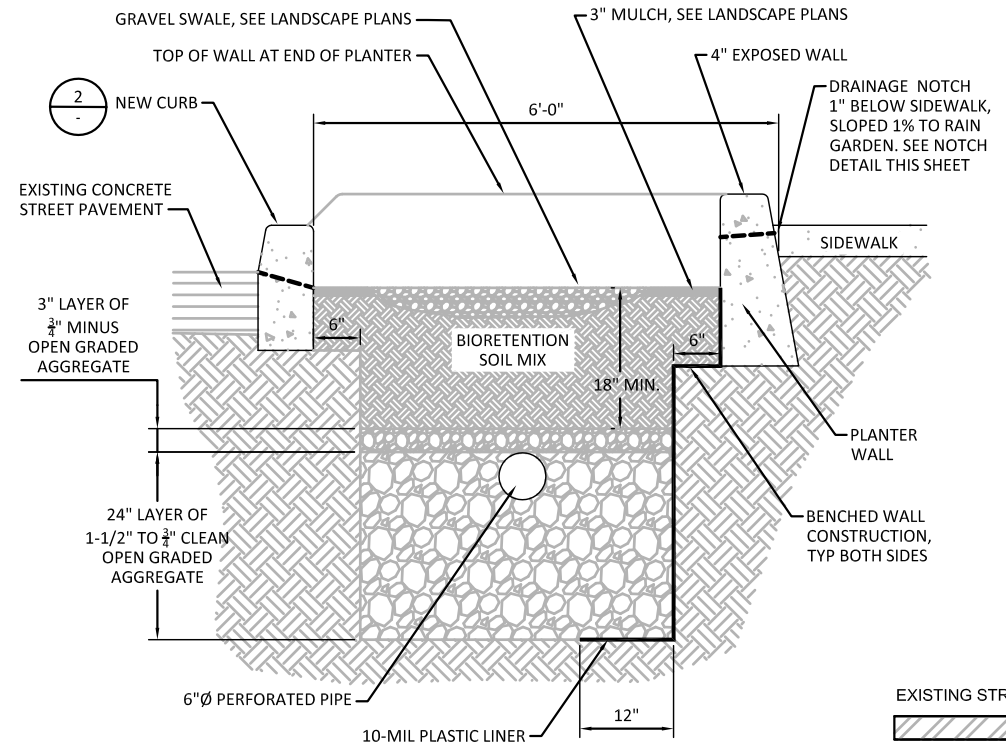

3 - RAIN GARDEN SECTION
NTS

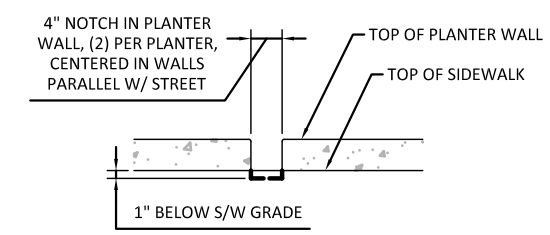

- - NOTCH DETAIL
NTS

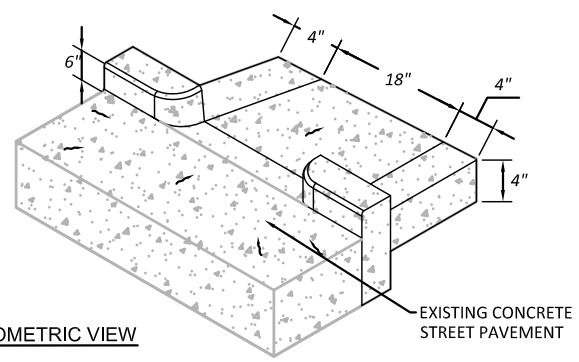

ISOMETRIC VIEW

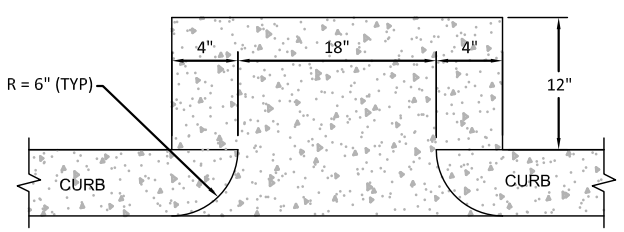

PLAN VIEW

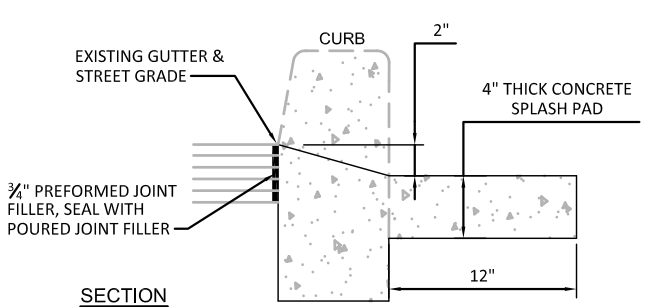

SECTION

4 - RAIN GARDEN INLET
NTS

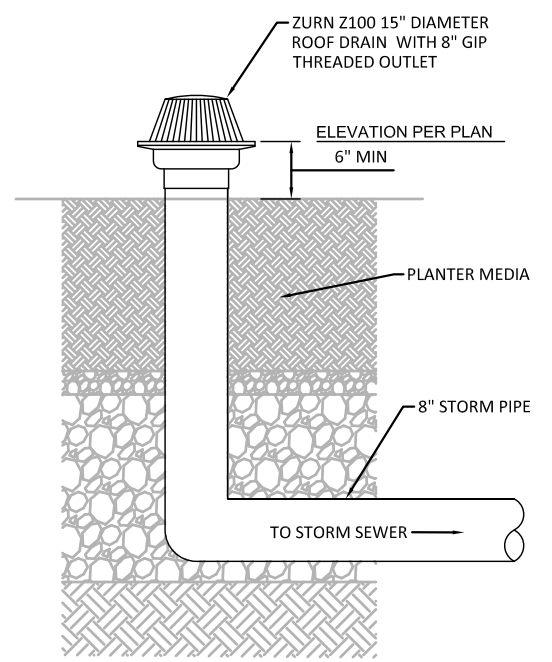

NOTE: CORE & GROUT CONNECTION TO STORM MANHOLE

5 - RAIN GARDEN OVERFLOW DRAIN
NTS

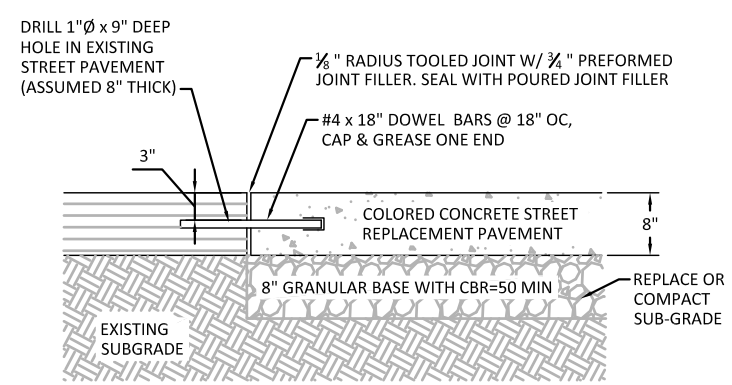

NOTES:

1. CONCRETE PAVEMENT IN STREETS AND DRIVEWAYS TO BE INSTALLED WITH # 4 BARS AT 18" OC, EACH WAY (NOT SHOWN FOR CLARITY)
2. DOWEL BARS SHALL BE INSTALLED AS INDICATED ALONG THE PERIMETER EDGE OF ALL CEMENT CONCRETE PAVEMENT ADJACENT TO EXISTING STREET PAVEMENT (CROSSWALKS AND OTHER STREET PAVEMENT REPLACEMENT OR REPAIRS).
3. COLOR CONCRETE REPLACEMENT PANELS TO MATCH EXISTING STREET

6 - CEMENT CONCRETE PAVEMENT PATCH
NTS

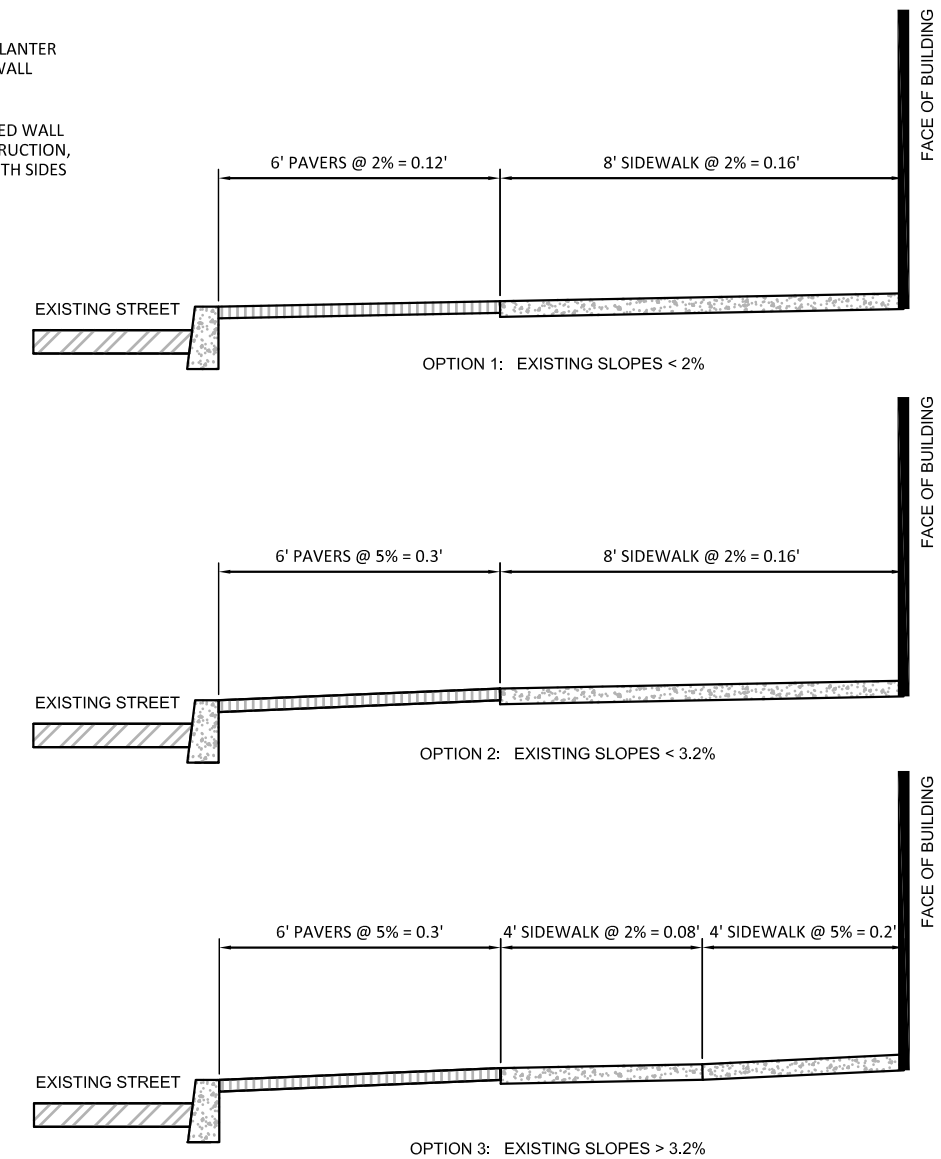

7 - SIDEWALK SLOPE OPTIONS
NTS

100% SUBMITTAL

MARK	REVISION DESCRIPTION	BY	APP.	DATE

FEDERAL AID NO.: TAP-6771 (001)
FEDERAL CONTRACT NO: TA-4635
STIP REFERENCE NO.: WA-04259
CITY OF LV PROJECT NO.: 13-2642-S

The City of Longview Washington

AMY BLAIN — STATE OF WASHINGTON — 39977 — REGISTERED PROFESSIONAL ENGINEER

DRAWN BY JRB
DESIGN BY SEE
CHECK BY SA
PROJ MGR DS

CITY OF LONGVIEW
DOWNTOWN STREETSCAPE DESIGN
CIVIL DETAILS

DRAWING NO. C-7
PROJECT NO. VAVAN-12-108
DATE: 10/25/13
SHEET NO. 15 OF 49

Last Saved by: Amyb on: May 13, 2014 9:19 AM File: R:\Engineers\PROJECTS_ACTIVE PROJECTS\DOWNTOWN CORRIDOR IMPROVEMENTS\100% Design Documents - FINAL\2013-10-31 - Longview Downtown Streetscape - Civil and Landscape\03_C07-REV01.dwg

Copyright © BergerABAM. All Rights Reserved.

MATERIALS & SITE FURNISHING NOTES:

1. COORDINATE WORK SHOWN ON THIS DRAWING WITH OTHER EXISTING OR PROPOSED SITE WORK, SEE CIVIL DRAWINGS.
2. CONTRACTOR IS TO EXERCISE CARE TO PROTECT UNDERGROUND UTILITIES AND AVOID DISTURBING OR DAMAGING THEM. CONTRACTOR TO FIELD VERIFY LOCATION AND DEPTH OF ALL UTILITIES. REFER TO UTILITY SHEETS FOR LOCATIONS. ANY DAMAGE RESULTING FROM THIS WORK MUST BE RESTORED AT THE CONTRACTOR'S EXPENSE AND TO THE SATISFACTION OF THE OWNER.
3. CONTRACTOR TO VERIFY AS-BUILT DIMENSIONS MATCH PLANS TO ALLOW FOR INSTALLATIONS OF ALL COMPONENTS OF PAVER SYSTEM. VERIFY COLOR AND TYPE OF PAVER PRIOR TO INSTALLATION.
4. CONTRACTOR TO VERIFY ALL QUANTITIES, MEASUREMENTS, AND SITE CONDITIONS.
5. ALL SITE FURNISHINGS AND LOCATIONS TO BE INSPECTED AND APPROVED BY THE OWNER PRIOR TO INSTALLATION.
6. DURING INSTALLATION THE CONTRACTOR SHALL NOTIFY THE OWNER OF ANY SITE CONDITIONS THAT CONFLICT WITH PLANS AND MAKE A RECOMMENDATION TO ADDRESS THE SPECIFIC SITUATION.
7. CONTRACTOR SHALL NOT INSTALL SITE FURNISHINGS WITHIN CLOSE PROXIMITY TO FIRE HYDRANTS. KEEP 5'-0" CLEARANCE FROM ALL HYDRANTS UNLESS OTHERWISE NOTED IN PLANS.
8. CONTRACTOR TO COORDINATE WITH OWNER AND DOWNTOWN ART COMMISSION FOR FINAL LOCATION PRIOR TO INSTALLATION.
9. BUSINESSES MUST REMAIN OPEN DURING CONSTRUCTION. CONTRACTOR TO COORDINATE WITH BUSINESS OWNERS AND CITY OF LONGVIEW PRIOR TO BEGINNING CONSTRUCTION.

LEGEND:

- 8-INCH X 8-INCH PERMEABLE CONCRETE PAVERS: MUTUAL MATERIALS ECO-PRIORA, COLOR: HARVEST BLEND, OR APPROVED EQUAL
- COLORED CONCRETE WITH 2-FOOT X 2-FOOT SCORE PATTERN: DAVIS COLORS - KAILUA, OR APPROVED EQUAL
- STANDARD GREY CONCRETE SIDEWALK WITH 4-FOOT X 4-FOOT SCORE PATTERN, TYPICAL FOR COMMERCE AVENUE & 8-FOOT X 8-FOOT FOR ALL OTHER SIDEWALKS
- TREE GRATE AND FRAME, 5-FOOT SQUARE CAST IRON TREE GRATE, URBAN ACCESSORIES, MODEL KIVA, OR EQUAL. STANDARD RAW CAST GREY IRON FINISH, OR EQUAL
- SEATED BENCH, 6-FOOT FAIRWEATHER PLAZA SERIES STEEL BENCH, MODEL PL-3, BLACK POWDER COAT, OR EQUAL
- BACKLESS BENCH, 6-FOOT FAIRWEATHER PLAZA SERIES STEEL BENCH, MODEL PL-1, BLACK POWDER COAT, OR EQUAL
- PUBLIC ART LOCATION
- BIKE RACK, FAIRWEATHER PLAZA SERIES STEEL BIKE RACK, MODEL BR-3, BLACK POWDER COAT, OR EQUAL
- TRASH RECEPTACLE, 30-GALLON SIDE OPENING TRASH RECEPTACLE BY LANDSCAPE FORMS, MODEL SCARBOROUGH, BLACK POWDER COAT, OR EQUAL
- EXISTING LIGHT TO REMAIN
- PROPOSED LIGHT, REFER TO ELECTRICAL PLANS

100% SUBMITTAL

MARK	REVISION DESCRIPTION	BY	APP.	DATE

FEDERAL AID NO.: TAP-6771 (001)
FEDERAL CONTRACT NO: TA-4635
STIP REFERENCE NO.: WA-04259
CITY OF LV PROJECT NO.: 13-2642-S

The City of Longview Washington

AMY BLAIN STATE OF WASHINGTON 39977 REGISTERED PROFESSIONAL ENGINEER

DRAWN BY JRB
DESIGN BY SEE
CHECK BY SA
PROJ MGR DS

CITY OF LONGVIEW
DOWNTOWN STREETSCAPE DESIGN
MATERIAL & FURNISHING NOTES AND LEGEND

DRAWING NO. **LA-1**
PROJECT NO. VAVAN-12-108
DATE: 10/25/13
SHEET NO. 16 OF 49

Last Saved by: Juanita.rogers on: Jan 21, 2014 5:03 PM File: R:\Engineers\PROJECTS_ACTIVE PROJECTS\DOWNTOWN CORRIDOR IMPROVEMENTS\100% Design Documents - FINAL\2013-10-31 - Longview Downtown Streetscape - Civil and Landscape\04_LA01.dwg

Copyright © BergerABAM. All Rights Reserved.

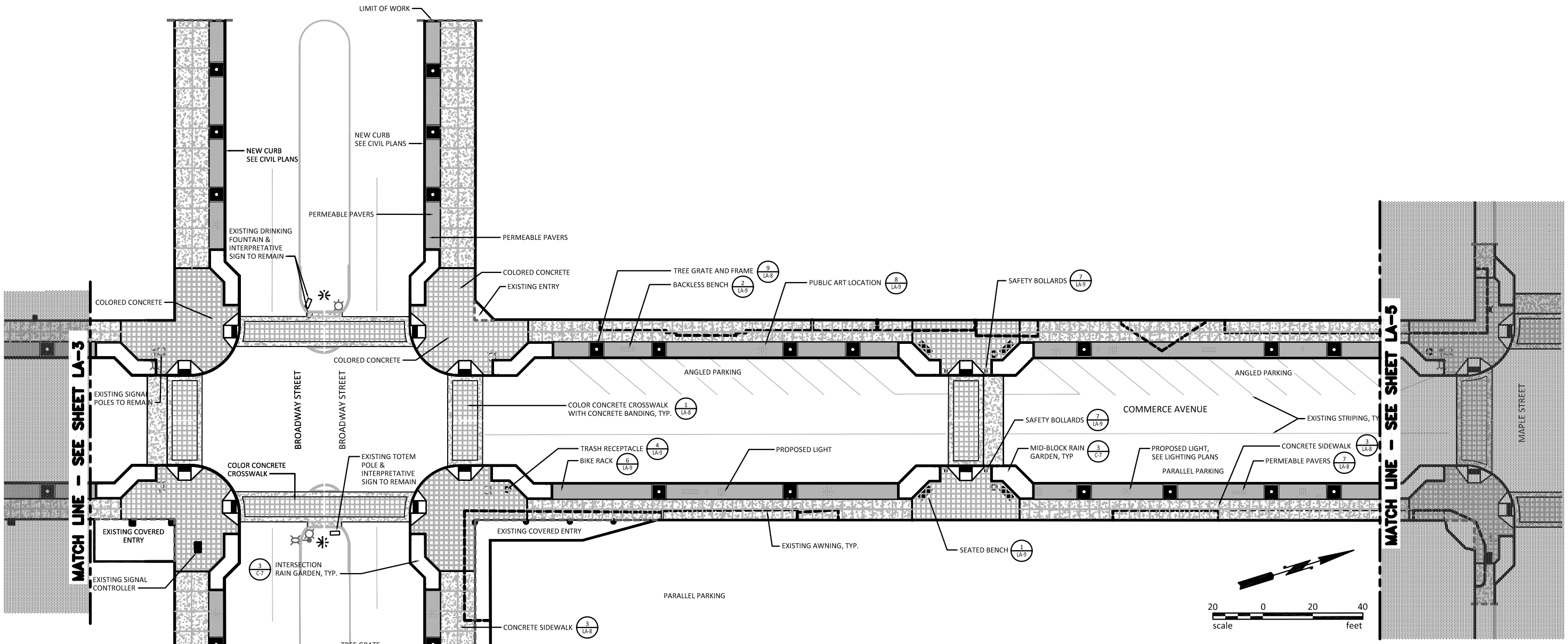

LEGEND:

- PERMEABLE PAVERS
- COLORED CONCRETE
- CONCRETE
- TREE GRATE AND FRAME
- SEATED BENCH
- BACKLESS BENCH
- PUBLIC ART LOCATION
- BIKE RACK
- TRASH RECEPTACLE
- EXISTING LIGHT TO REMAIN
- PROPOSED LIGHT

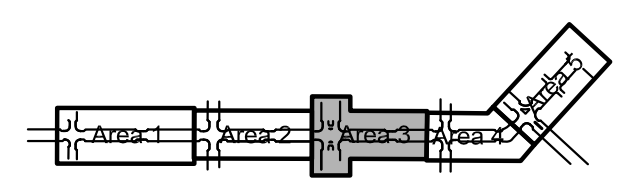

100% SUBMITTAL

MARK	REVISION DESCRIPTION	BY	APP.	DATE

FEDERAL AID NO.: TAP–6771 (001)
FEDERAL CONTRACT NO: TA–4635
STIP REFERENCE NO.: WA–04259
CITY OF LV PROJECT NO.: 13–2642–S

The City of Longview Washington

AMY BLAIN STATE OF WASHINGTON 39977 REGISTERED PROFESSIONAL ENGINEER

DRAWN BY JBR
DESIGN BY JBR
CHECK BY DS
PROJ MGR DS

CITY OF LONGVIEW
DOWNTOWN STREETSCAPE DESIGN
MATERIAL & FURNISHING PLAN
AREA 3

DRAWING NO. **LA-4**
PROJECT NO. VAVAN-12-108
DATE: 10/25/13
SHEET NO. 19 OF 49

Last Saved by: Juanita.rogers on: Jan 21, 2014 5:03 PM File: R:\Engineers\PROJECTS_ACTIVE PROJECTS\DOWNTOWN CORRIDOR IMPROVEMENTS\100% Design Documents - FINAL\2013-10-31 - Longview Downtown Streetscape - Civil and Landscape\04_LA04.dwg

Copyright © BergerABAM. All Rights Reserved.

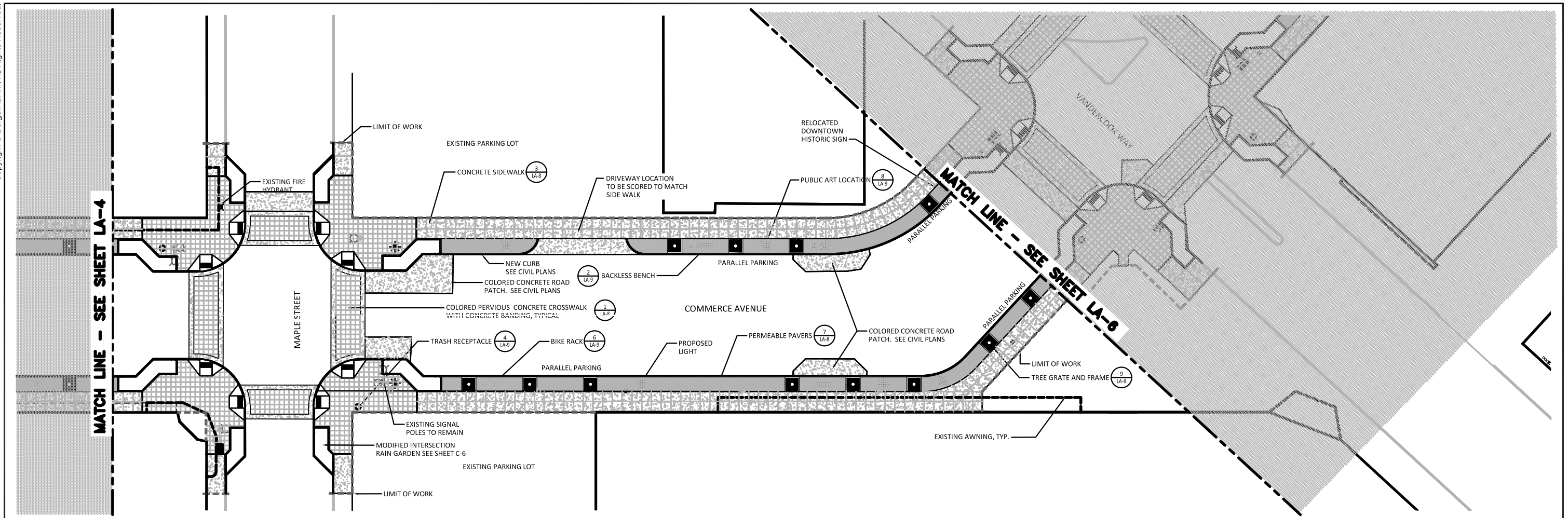

LEGEND:

- PERMEABLE PAVERS
- COLORED CONCRETE
- CONCRETE
- TREE GRATE AND FRAME
- SEATED BENCH
- BACKLESS BENCH
- PUBLIC ART LOCATION
- BIKE RACK
- TRASH RECEPTACLE
- EXISTING LIGHT TO REMAIN
- PROPOSED LIGHT

20 0 20 40
scale feet

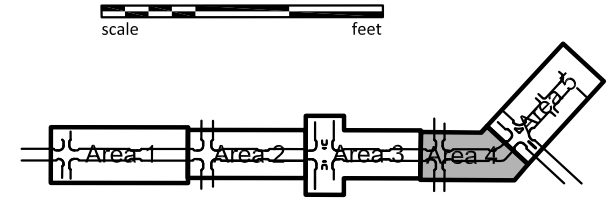

100% SUBMITTAL

MARK	REVISION DESCRIPTION	BY	APP.	DATE

FEDERAL AID NO.: TAP–6771 (001)
FEDERAL CONTRACT NO: TA–4635
STIP REFERENCE NO.: WA–04259
CITY OF LV PROJECT NO.: 13–2642–S

The City of Longview Washington

AMY BLAIN STATE OF WASHINGTON 39977 REGISTERED PROFESSIONAL ENGINEER

DRAWN BY JBR
DESIGN BY JBR
CHECK BY DS
PROJ MGR DS

CITY OF LONGVIEW
DOWNTOWN STREETSCAPE DESIGN
MATERIAL & FURNISHING PLAN
AREA 4

DRAWING NO. **LA-5**
PROJECT NO. VAVAN-12-108
DATE: 10/25/13
SHEET NO. 20 OF 49

Last Saved by: Amyb on: Apr 17, 2014 10:57 AM File: R:\Engineers\PROJECTS_ACTIVE PROJECTS\DOWNTOWN CORRIDOR IMPROVEMENTS\100% Design Documents - FINAL\2013-10-31 - Longview Downtown Streetscape - Civil and Landscape\04_LA05-REV01.dwg

Copyright © BergerABAM. All Rights Reserved.

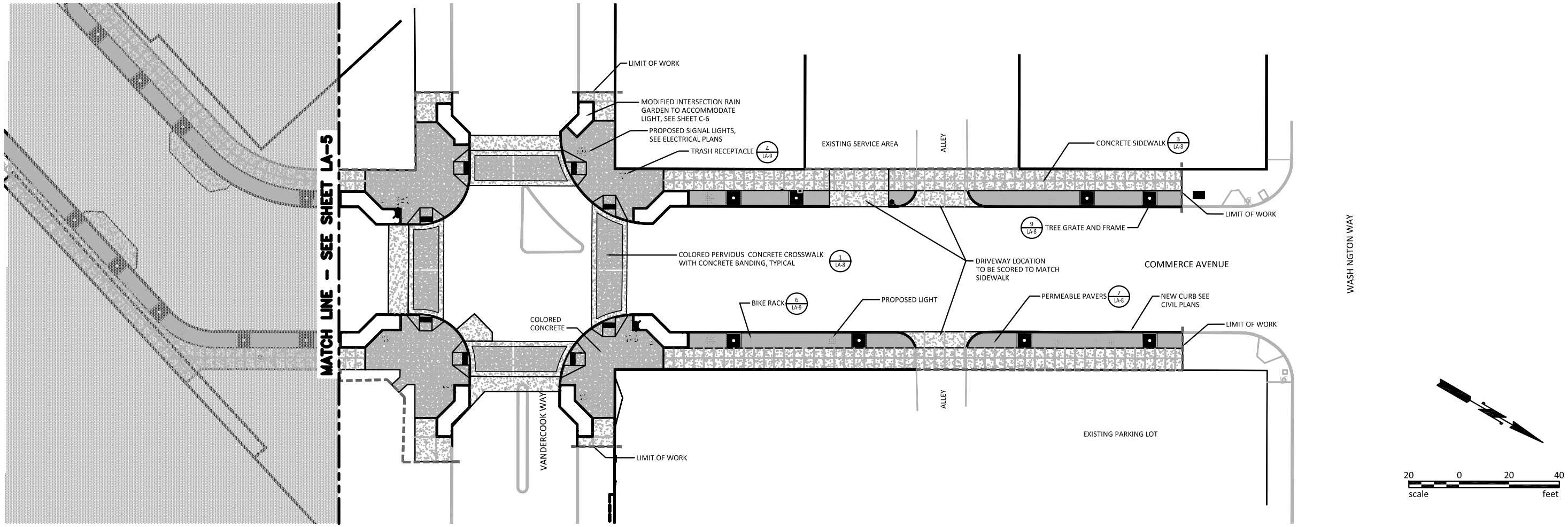

LEGEND:

- PERMEABLE PAVERS
- COLORED CONCRETE
- CONCRETE
- TREE GRATE AND FRAME
- SEATED BENCH
- BACKLESS BENCH
- PUBLIC ART LOCATION
- BIKE RACK
- TRASH RECEPTACLE
- EXISTING LIGHT TO REMAIN
- PROPOSED LIGHT

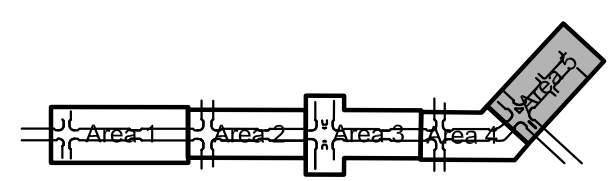

100% SUBMITTAL

MARK	REVISION DESCRIPTION	BY	APP.	DATE

FEDERAL AID NO.: TAP–6771 (001)
FEDERAL CONTRACT NO: TA–4635
STIP REFERENCE NO.: WA–04259
CITY OF LV PROJECT NO.: 13–2642–S

The City of Longview Washington

AMY BLAIN STATE OF WASHINGTON 39977 REGISTERED PROFESSIONAL ENGINEER

DRAWN BY JBR
DESIGN BY JBR
CHECK BY DS
PROJ MGR DS

CITY OF LONGVIEW
DOWNTOWN STREETSCAPE DESIGN
MATERIAL & FURNISHING PLAN
AREA 5

DRAWING NO. **LA-6**
PROJECT NO. VAVAN-12-108
DATE: 10/25/13
SHEET NO. 21 OF 49

Last Saved by: Amyb on: Apr 17, 2014 11:12 AM File: R:\Engineers\PROJECTS_ACTIVE PROJECTS\DOWNTOWN CORRIDOR IMPROVEMENTS\100% Design Documents - FINAL\2013-10-31 - Longview Downtown Streetscape - Civil and Landscape\04_LA06-REV01.dwg

Copyright © BergerABAM. All Rights Reserved.

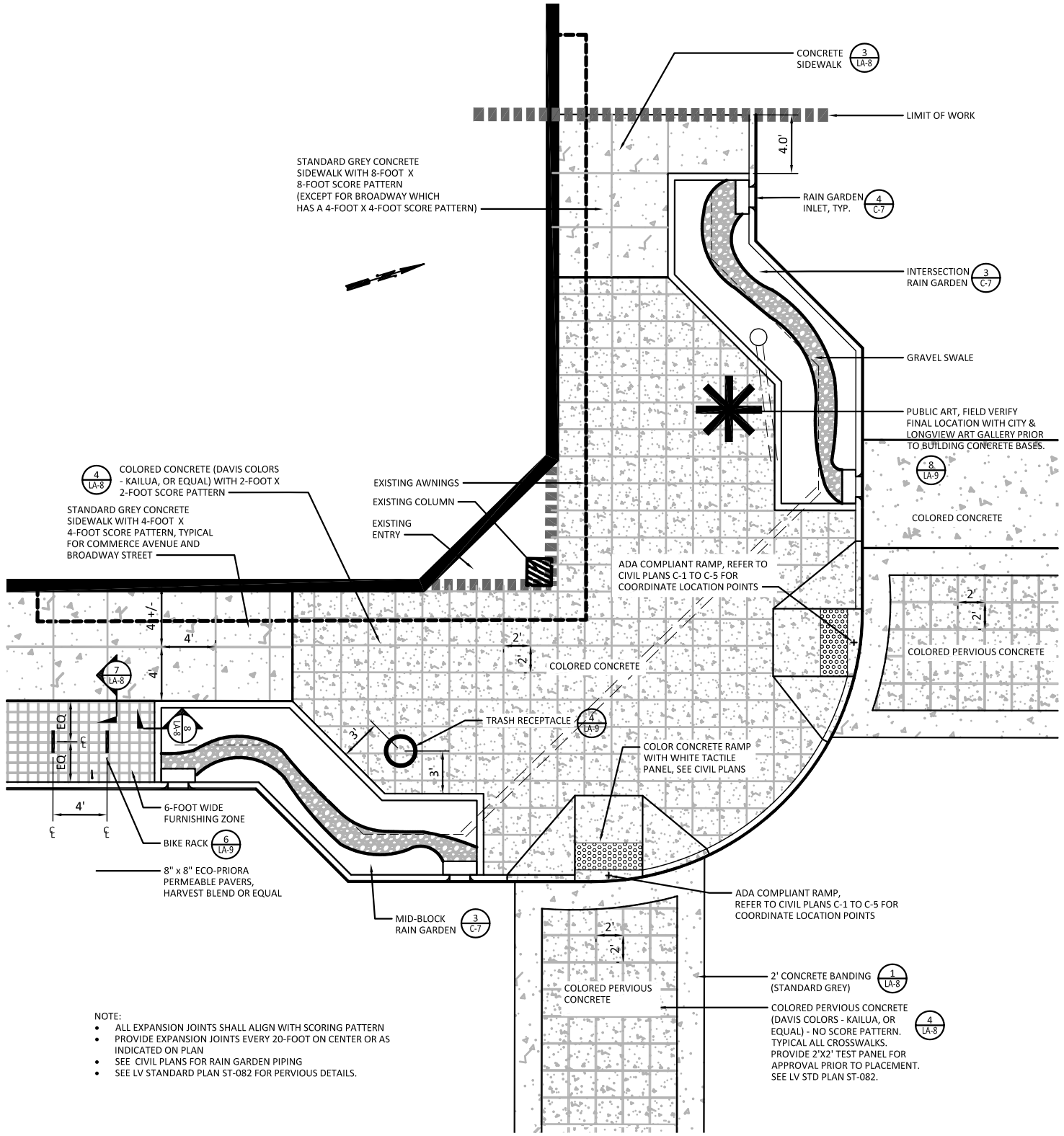

NOTE:
- ALL EXPANSION JOINTS SHALL ALIGN WITH SCORING PATTERN
- PROVIDE EXPANSION JOINTS EVERY 20-FOOT ON CENTER OR AS INDICATED ON PLAN
- SEE CIVIL PLANS FOR RAIN GARDEN PIPING
- SEE LV STANDARD PLAN ST-082 FOR PERVIOUS DETAILS.

1 / LA-7 INTERSECTION BULB-OUT DETAIL
SCALE: 1"=5'

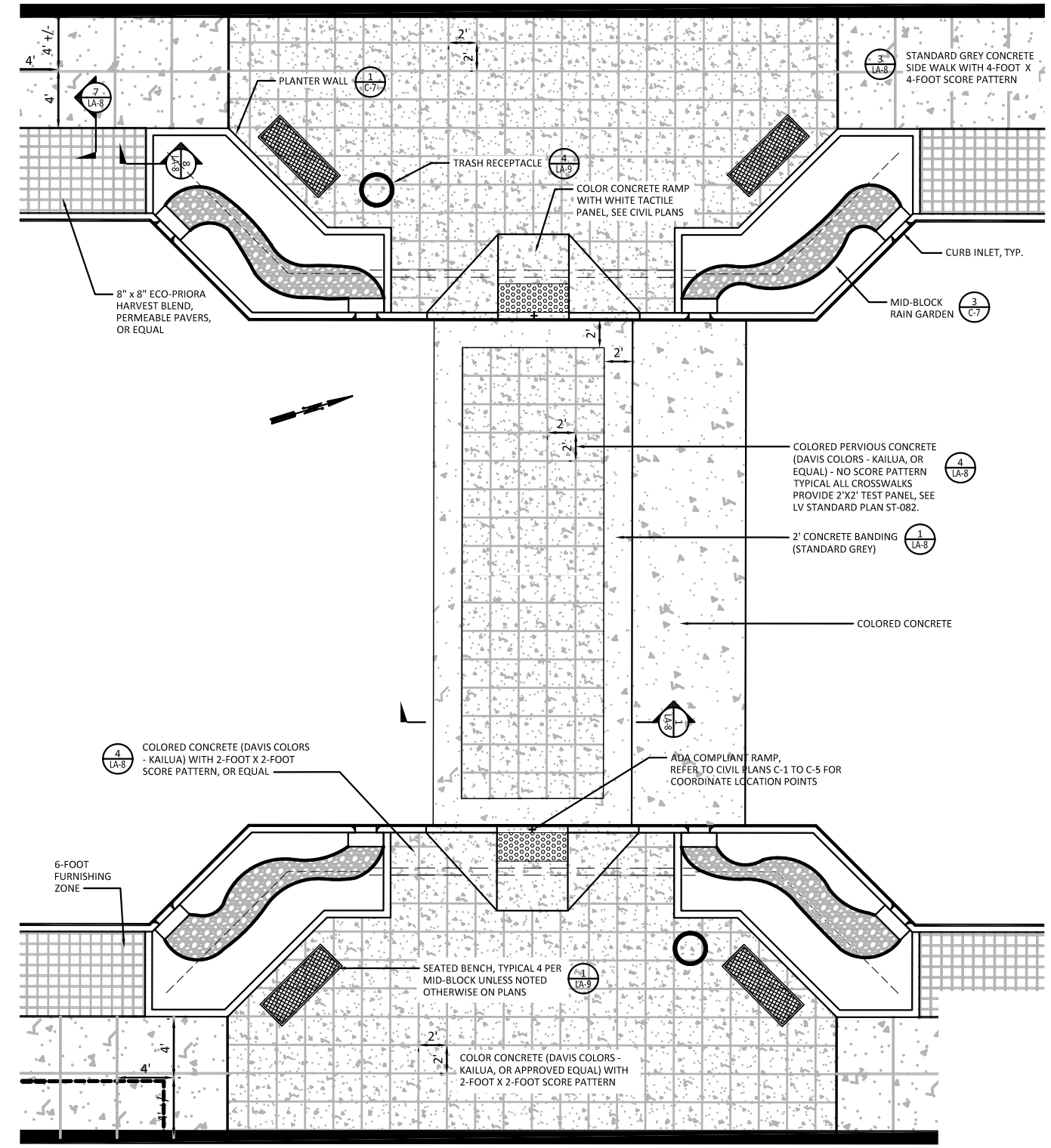

2 / LA-7 MID-BLOCK CROSSING DETAIL
SCALE: 1"=5'

100% SUBMITTAL

MARK	REVISION DESCRIPTION	BY	APP.	DATE

FEDERAL AID NO.: TAP-6771 (001)
FEDERAL CONTRACT NO: TA-4635
STIP REFERENCE NO.: WA-04259
CITY OF LV PROJECT NO.: 13-2642-S

The City of Longview Washington

AMY BLAIN — STATE OF WASHINGTON — 39977 — REGISTERED PROFESSIONAL ENGINEER

DRAWN BY JBR
DESIGN BY JBR
CHECK BY DS
PROJ MGR DS

CITY OF LONGVIEW
DOWNTOWN STREETSCAPE DESIGN
MATERIAL & FURNISHING DETAILS
INTERSECTION & MID-BLOCK ENLARGEMENTS

DRAWING NO. LA-7
PROJECT NO. VAVAN-12-108
DATE: 10/25/13
SHEET NO. 22 OF 49

Last Saved by: Amyb on: Apr 17, 2014 11:19 AM File: R:\Engineers\PROJECTS_ACTIVE PROJECTS\DOWNTOWN CORRIDOR IMPROVEMENTS\100% Design Documents - FINAL\2013-10-31 - Longview Downtown Streetscape - CM and Landscape\04_LA07-REV01.dwg

Copyright © BergerABAM. All Rights Reserved.

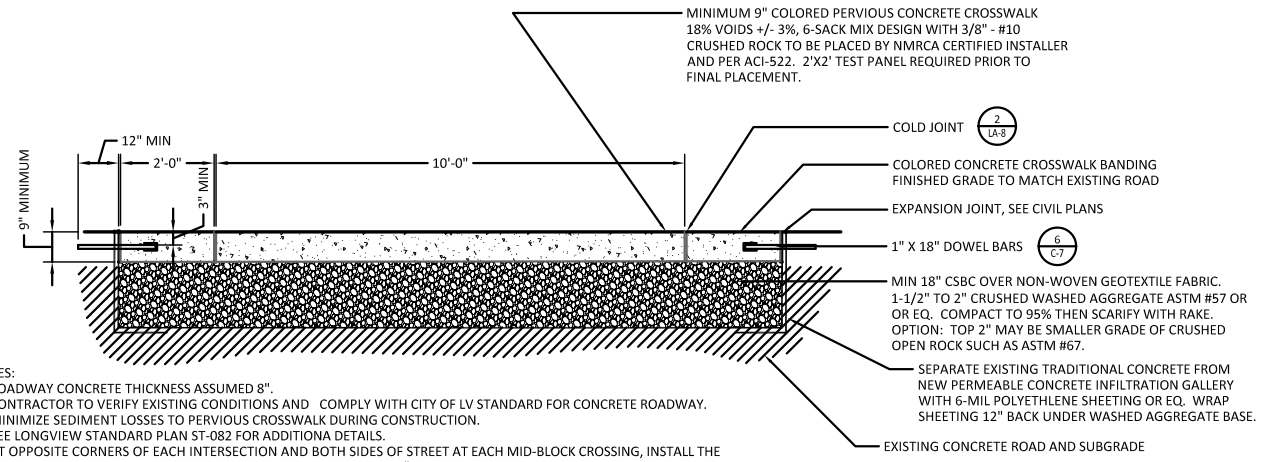

NOTES:
1. ROADWAY CONCRETE THICKNESS ASSUMED 8".
2. CONTRACTOR TO VERIFY EXISTING CONDITIONS AND COMPLY WITH CITY OF LV STANDARD FOR CONCRETE ROADWAY.
3. MINIMIZE SEDIMENT LOSSES TO PERVIOUS CROSSWALK DURING CONSTRUCTION.
4. SEE LONGVIEW STANDARD PLAN ST-082 FOR ADDITIONA DETAILS.
5. AT OPPOSITE CORNERS OF EACH INTERSECTION AND BOTH SIDES OF STREET AT EACH MID-BLOCK CROSSING, INSTALL THE FOLLOWING STAINLESS STEEL BUTTONS TO BE PROVIDED BY THE CITY: "PERVIOUS CONCRETE. DUMP NO SEDIMENTS, DEBRIS OR POLLUTANTS".

NOTE:
FOR ALL CONCRETE WORK, REFER TO CIVIL PLANS AND CITY OF LONGVIEW STANDARDS, AND REQUIREMENTS

1 LA-8 COLORED PERVIOUS CONCRETE CROSSWALK
SCALE: NTS

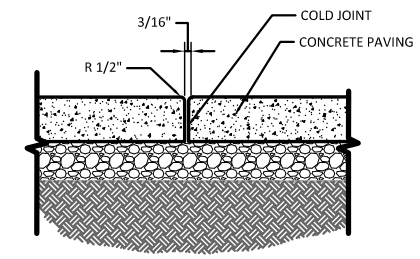

2 LA-8 COLD JOINT
SCALE: NTS

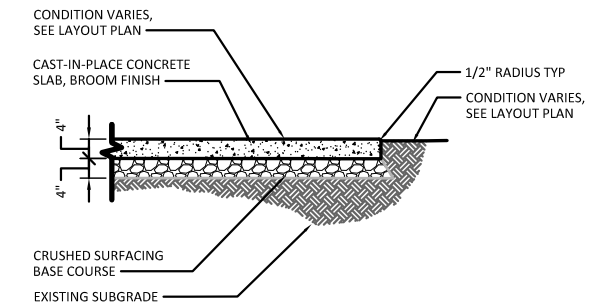

NOTE:
COMPLY WITH CITY OF LONGVIEW SIDEWALK STANDARD ST-150.

3 LA-8 STANDARD CONCRETE SIDEWALK
SCALE: NTS

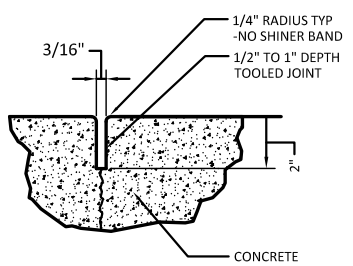

NOTE:
COMPLY WITH CITY OF LONGVIEW STANDARDS FOR CONCRETE.

4 LA-8 CONTROL JOINT
SCALE: NTS

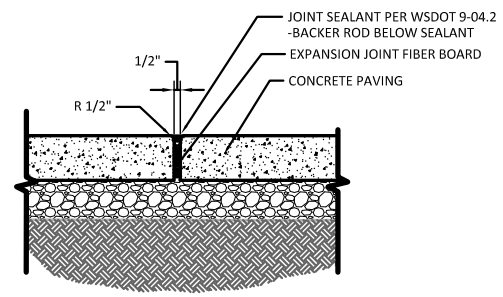

PER CITY OF LONGVIEW:
EXPANSION JOINTS AT CURB MUST ALIGN WITH EXPANSION JOINTS IN SIDEWALK

5 LA-8 EXPANSION JOINT
SCALE: NTS

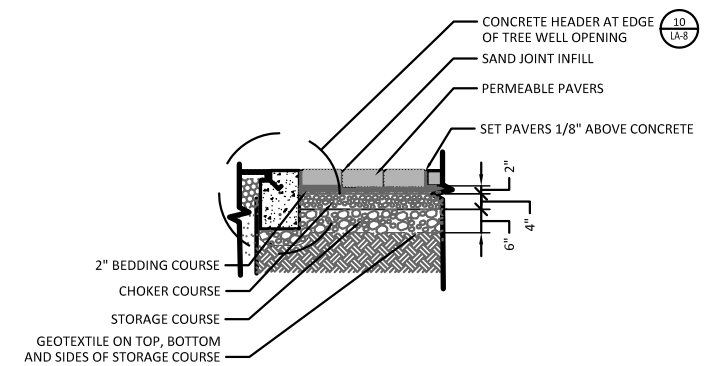

6 LA-8 PAVERS AT TREE GRATE
SCALE: NTS

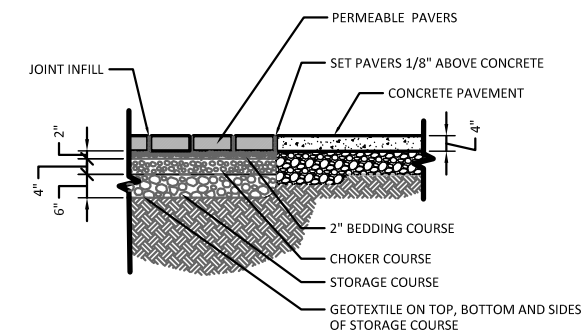

7 LA-8 PERMEABLE PAVERS AT SIDEWALK
SCALE: NTS

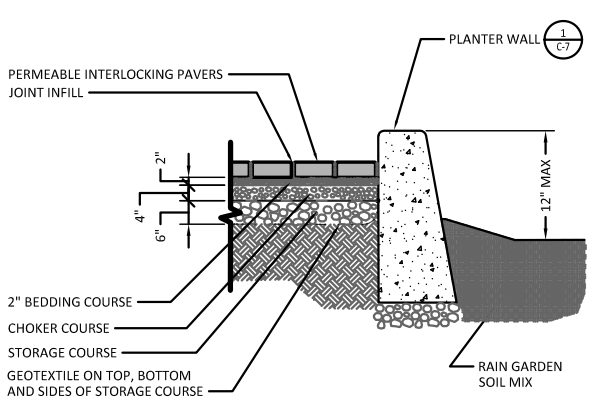

8 LA-8 PERMEABLE PAVERS AT RAIN GARDEN
SCALE: NTS

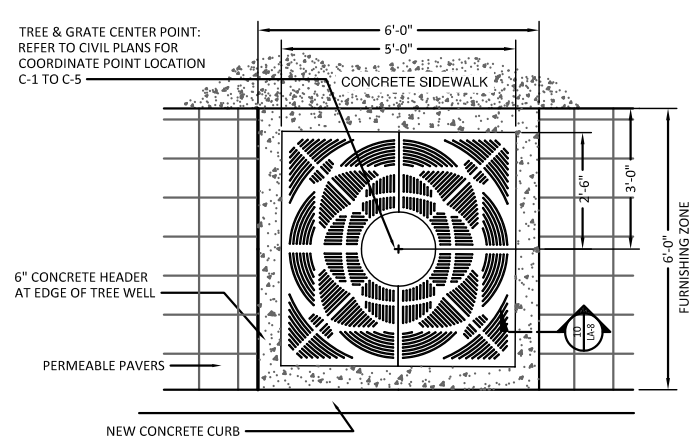

60" X 60" TREE GRATE IN TWO SECTIONS.

5/16" MAXIMUM SLOT OPENING FOR PEDESTRIAN SAFETY & ADA COMPLIANCE.

CAST FROM 100% RECYCLED IRON FOR PEDESTRIAN LOADS ONLY.

TREE OPENING: 19"

FINISH: UNFINISHED
USE FRAME MODELS: 6000F

WEIGHT:
IRON= 475 LB/ 216 KG

1/2" x 1" x 1/4" THICK GRINDING PADS FOR LEVELING - TYP. 4 OR MORE PLACES

9 LA-8 60" SQUARE TREE GRATE
SCALE: NTS

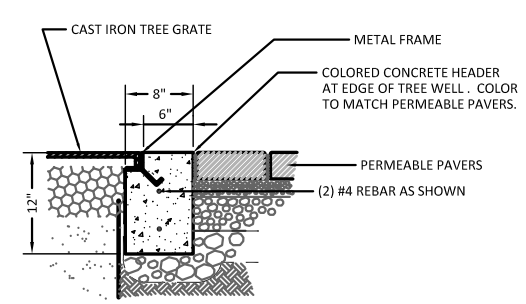

10 LA-8 TREE GRATE CONCRETE HEADER DETAIL
SCALE: NTS

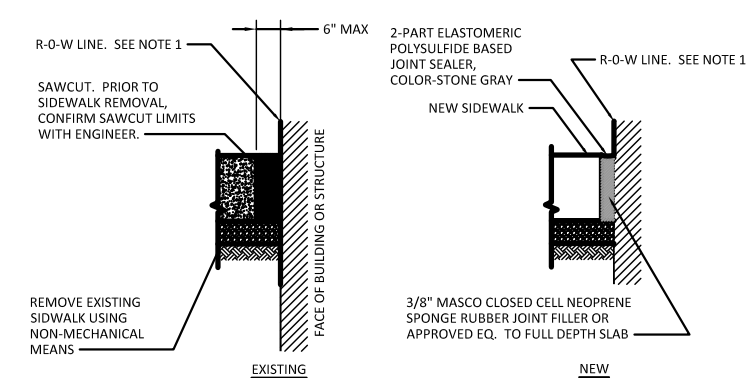

1. MATCH ELEVATION OF EXISTING SIDEWALK SURFACE AT EDGE OF R-O-W. WHERE R-O-W LINE MATCHES FACE OF BUILDING, MARK SIDEWALK SURFACE LINE AT BUILDING PRIOR TO SIDEWALK REMOVAL. WHERE EXISTING SIDEWALK LIES BETWEEN BUILDING AND R-O-W LINE, TAKE EXTRA CARE TO MAINTAIN EXISTING SIDEWALK SECTION OUTSIDE OF R-O-W AT EXISTING ELEVATION.

11 LA-8 BACK OF WALK DETAIL
SCALE: NTS

100% SUBMITTAL

MARK	REVISION DESCRIPTION	BY	APP.	DATE

FEDERAL AID NO.: TAP-6771 (001)
FEDERAL CONTRACT NO: TA-4635
STIP REFERENCE NO.: WA-04259
CITY OF LV PROJECT NO.: 13-2642-S

The City of Longview Washington

AMY BLAIN STATE OF WASHINGTON 39977 REGISTERED PROFESSIONAL ENGINEER

DRAWN BY JBR
DESIGN BY JBR
CHECK BY DS
PROJ MGR DS

CITY OF LONGVIEW
DOWNTOWN STREETSCAPE DESIGN
MATERIAL & FURNISHING DETAILS

DRAWING NO. **LA-8**
PROJECT NO. VAVAN-12-108
DATE: 10/25/13
SHEET NO. 23 OF 49

Last Saved by: Amyb on: May 12, 2014 3:57 PM FILE: R:\Engineers\PROJECTS_ACTIVE PROJECTS\DOWNTOWN CORRIDOR IMPROVEMENTS\100% Design Documents - FINAL\2013-10-31 - Longview Downtown Streetscape - Civil and Landscape\04_LA08-REV01.dwg

Copyright © BergerABAM. All Rights Reserved.

NOTES:
1. INSTALLATION TO BE COMPLETED IN ACCORDANCE WITH MANUFACTURER'S SPECIFICATIONS
2. SURFACE MOUNT TO CONCRETE

MATERIALS:
SEAT STRAPS: 1/4" X 1 1/2"
STEEL FLAT BAR STRAP SUPPORTS: 1/4" X 1/2"
STEEL FLAT BAR PIPE SUPPORTS: 1.315" O.D. X 0.133"
WALL SCHEDULE 40 STEEL PIPE END UNITS:
CAST DUCTILE IRON WITH 9/16" Ø HOLES MOUNTED WITH FOUR (4), CONTRACTOR SUPPLIED, 1/2" Ø X 9" STAINLESS STEEL ANCHOR BOLTS

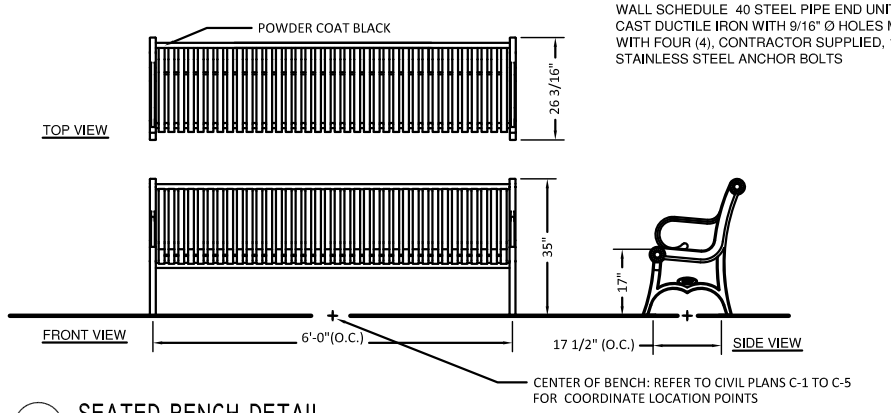

1 LA-9 SEATED BENCH DETAIL
SCALE: NTS

NOTES:
1. INSTALLATION TO BE COMPLETED IN ACCORDANCE WITH MANUFACTURER'S SPECIFICATIONS
2. DO NOT SCALE DRAWINGS
3. CENTER ARM REST CAN BE ADDED AT NO ADDITIONAL CHARGE TO 72" BENCHES
4. INSTALL WITH CONCRETE FIGURE DETAIL 5 LA-9

MATERIALS:
SEAT STRAPS: 1/4" X 1 1/2"
STEEL FLAT BAR STRAP SUPPORTS: 1/4" X 1/2"
STEEL FLAT BAR PIPE SUPPORTS: 1.315" O.D. X 0.133"
WALL SCHEDULE 40 STEEL PIPE END UNITS:
CAST DUCTILE IRON WITH 9/16" Ø HOLES

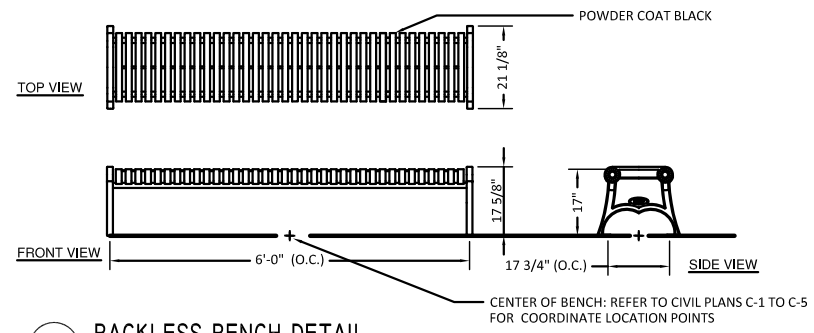

2 LA-9 BACKLESS BENCH DETAIL
SCALE: NTS

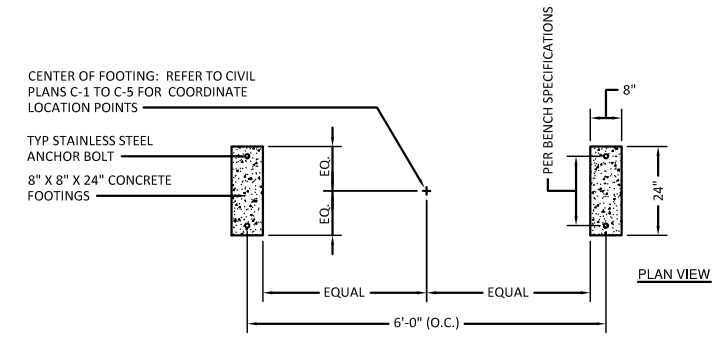

3 LA-9 BACKLESS BENCH FOOTING DETAIL
SCALE: NTS

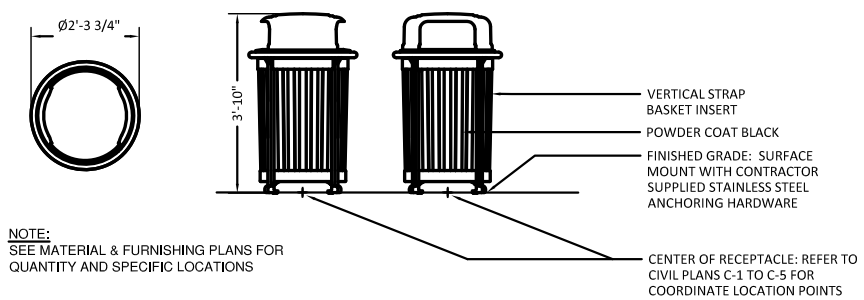

NOTE:
SEE MATERIAL & FURNISHING PLANS FOR QUANTITY AND SPECIFIC LOCATIONS

4 LA-9 TRASH RECEPTACLE DETAIL
SCALE: NTS

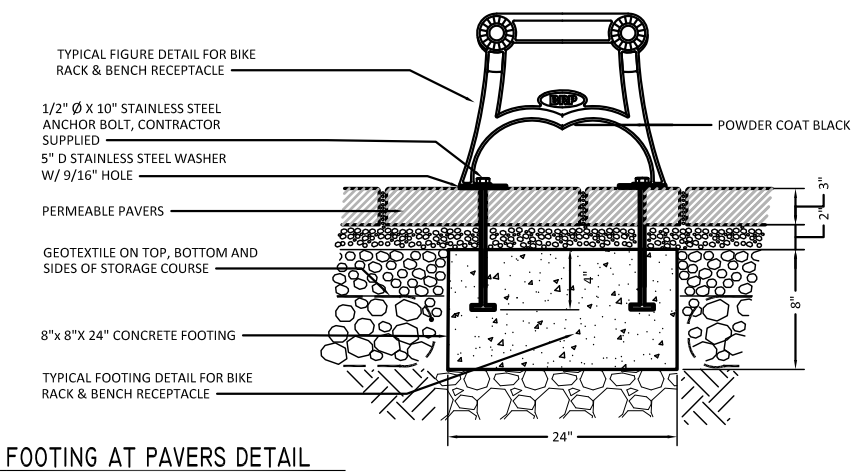

5 LA-9 FOOTING AT PAVERS DETAIL
SCALE: NTS

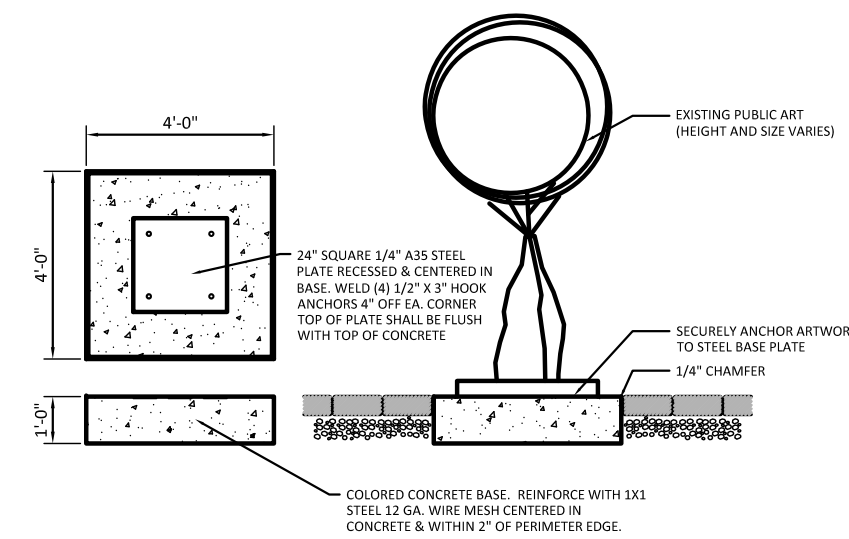

NOTE:
1. CONTRACTOR SHALL DISASSEMBLE EXISTING PUBLIC ARTWORK, INCLUDING ABOVE GRADE CONCRETE OR STEEL PEDESTAL BASES, AND TRANSPORT TO CITY STORAGE FACILITY OR OTHER CITY APPROVED LOCATION. TEMPORARY ON-STREET SITE MAY BE PREFERRED IN THE 1100 AND 1200 BLOCKS OF COMMERCE AND/OR 1300 AND 1400 BLOCKS OF BROADWAY. CONTRACTOR SHALL COORDINATE & MEET WITH THE CITY & LONGVIEW ART GALLERY TO FIELD IDENTIFY, LOCATE, DOCUMENT, AND DISASSEMBLE OF ART PIECES PRIOR TO MOVING ANY ARTWORK.
2. CONTRACTOR SHALL MEET WITH THE CITY AND LONGVIEW ART GALLERY PRIOR TO CONSTRUCTION OF PERMANENT CONCRETE ART BASES TO FIELD VERIFY FINAL LOCATIONS. INSTALL NEW BASES IN CENTER OF 6-FOOT FURNISHING ZONE, FLUSHI WITH TOP OF PERMEABLE PAVERS.
3. AFTER SIDEWALK CONSTRUCTION IS COMPLETE, CONTRACTOR SHALL REINSTALL ARTWORK ON NEW CONCRETE BASES. RE-INSTALLATION OF ARTWORK PIECES SHALL BE COORDINATED WITH THE CITY OF LONGVIEW AND LONGVIEW ART GALLERY TO ENSURE PROPER PLACEMENT & LOCATION.
4. ANY ARTWORK WITHOUT CONCRETE BASE SHALL BE REINSTALLED PER LONGVIEW OUTDOOR GALLERY PLACEMENT BASE.
5. CONTRACTOR SHALL SUPPLY AND INSTALL ALL HARDWARE AS REQUIRED FOR INSTALLATION OR ARTWORK.

8 LA-9 OUTDOOR GALLERY PLACEMENT BASE
SCALE: NTS

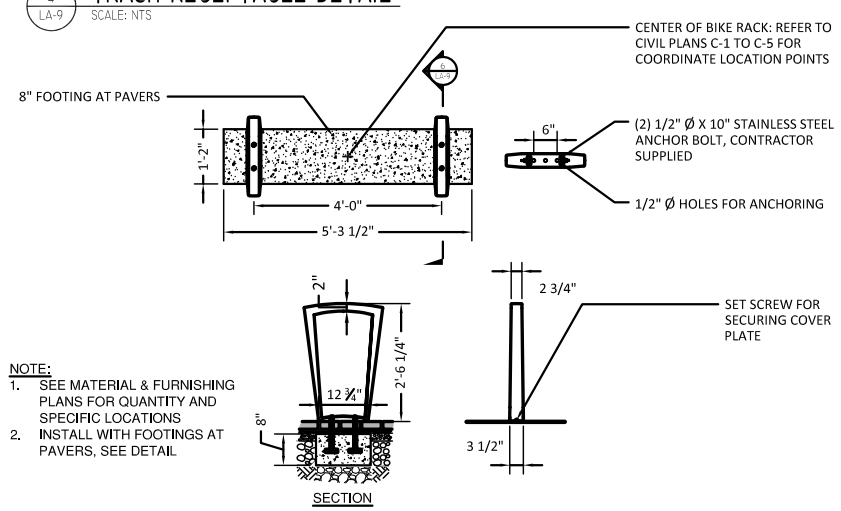

NOTE:
1. SEE MATERIAL & FURNISHING PLANS FOR QUANTITY AND SPECIFIC LOCATIONS
2. INSTALL WITH FOOTINGS AT PAVERS, SEE DETAIL

6 LA-9 BIKE RACK DETAIL
SCALE: NTS

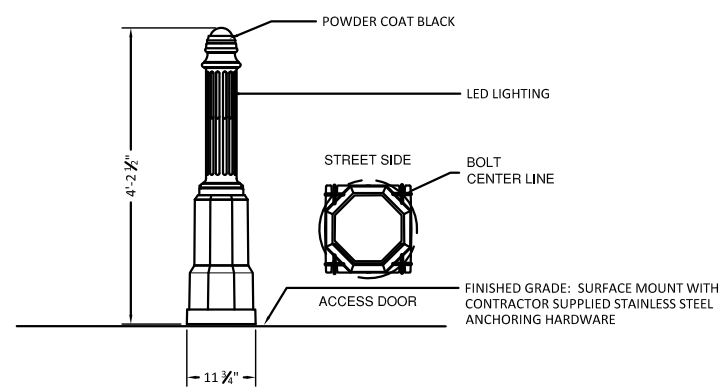

7 LA-9 SAFETY BOLLARD DETAIL
SCALE: NTS

100% SUBMITTAL

MARK	REVISION DESCRIPTION	BY	APP.	DATE

FEDERAL AID NO.: TAP-6771 (001)
FEDERAL CONTRACT NO: TA-4635
STIP REFERENCE NO.: WA-04259
CITY OF LV PROJECT NO.: 13-2642-S

The City of Longview Washington

AMY BLAIN — STATE OF WASHINGTON — 39977 — REGISTERED PROFESSIONAL ENGINEER

DRAWN BY JBR
DESIGN BY JBR
CHECK BY DS
PROJ MGR DS

CITY OF LONGVIEW
DOWNTOWN STREETSCAPE DESIGN
MATERIAL & FURNISHING DETAILS

DRAWING NO. **LA-9**
PROJECT NO. VAVAN-12-108
DATE: 10/25/13
SHEET NO. 24 OF 49

Last Saved by: Amyb on: Apr 17, 2014 12:12 PM File: R:\Engineers\PROJECTS_ACTIVE PROJECTS\DOWNTOWN CORRIDOR IMPROVEMENTS\100% Design Documents - FINAL\2013-10-31 - Longview Downtown Streetscape - Civil and Landscape\04_LA09-REV01.dwg

Copyright © BergerABAM. All Rights Reserved.

PLANT NOTES:

1. REGRADE AND SEED STAGING AREAS AND ALL OTHER ADJACENT AREAS DISTURBED DURING CONSTRUCTION. SEE SPECIFICATIONS.
2. RAIN GARDENS: PROVIDE MINIMUM 18 INCH DEPTH OF BIO RETENTION SOIL ABOVE 8" OF PREPARED SUBGRADE. SEE SOIL PREPARATION SPECIFICATIONS.
3. COORDINATE WORK SHOWN ON THIS DRAWING WITH OTHER EXISTING OR PROPOSED SITE WORK, SEE CIVIL DRAWINGS.
4. CONTRACTOR IS TO EXERCISE CARE TO PROTECT UNDERGROUND UTILITIES AND AVOID DISTURBING OR DAMAGING THEM. CONTRACTOR TO FIELD VERIFY LOCATION AND DEPTH OF ALL UTILITIES. REFER TO UTILITY SHEETS FOR LOCATIONS. ANY DAMAGE RESULTING FROM THIS WORK MUST BE RESTORED AT THE CONTRACTOR'S EXPENSE AND TO THE SATISFACTION OF THE OWNER.
5. AFTER PLANTING, ALL SHRUB AND GROUNDCOVER AREAS ARE TO RECEIVE 3" OF MULCH.
6. CONTRACTOR TO VERIFY ALL QUANTITIES, MEASUREMENTS, AND SITE CONDITIONS. PLANT COUNT FOR TREES AND SHRUBS ARE SUPPLIED FOR THE CONTRACTOR'S CONVENIENCE. CONTRACTOR RESPONSIBLE FOR INSTALLING ALL PLANTS IN LOCATIONS AND QUANTITIES SHOWN GRAPHICALLY.
7. MEASUREMENTS, CALIPER, BRANCHING, GRADING QUALITY, BALLING AND BURLAPPING SHALL FOLLOW THE AMERICAN STANDARD OF NURSERY STOCK BY THE AMERICAN ASSOCIATION OF NURSERYMEN, LATEST EDITION.
8. PROVIDE NURSERY 'SHIPPING LIST' TO VERIFY PROPER SPECIES AND QUANTITY AT POST-GRADING, PRE-PLANTING INSPECTION MEETING.
9. ALL PLANT MATERIAL AND LOCATIONS TO BE INSPECTED AND APPROVED BY THE OWNER'S REPRESENTATIVE PRIOR TO INSTALLATION.
10. CONTRACTOR SHALL PROVIDE FOR ESTABLISHMENT WATERING OF ALL PLANTINGS UNTIL FINAL ACCEPTANCE. THE CONTRACTOR SHALL REPLACE ALL DEAD OR UNHEALTHY PLANTS FOUND THROUGHOUT THE ESTABLISHMENT PERIOD.
11. MAINTENANCE OF THE PLANTED AREAS THROUGH THE ESTABLISHMENT PERIOD SHALL INCLUDE WATERING, PROTECTION FROM INSECTS AND DISEASES, WEEDING AND PRUNING AS WELL AS REPLACEMENT OF ANY PLANTS WHICH APPEAR TO BE IN DISTRESS. TREE STAKES SHALL BE KEPT SECURE AT ALL TIMES. DEFECTIVE MATERIALS AS DETERMINED BY THE OWNER SHALL BE REPLACED IMMEDIATELY WITH SPECIMENS OF THE SAME SPECIES AND SIZE OF THE ORIGINAL.
12. SOIL TESTS TO BE PROVIDED BY CONTRACTOR AND RECOMMENDATIONS TO BE SUBMITTED TO OWNER'S REPRESENTATIVE CONCERNING ANY SOIL AMENDMENTS OR FERTILIZATION REQUIREMENTS.
13. DURING INSTALLATION THE CONTRACTOR SHALL NOTIFY THE OWNER'S REPRESENTATIVE OF ANY CONDITIONS WHICH MAY BE HARMFUL TO PLANT LIFE, SUCH AS POOR DRAINAGE, HAZARDOUS MATERIALS, ETC. THE LANDSCAPE CONTRACTOR SHALL MAKE A RECOMMENDATION TO ADDRESS THE SPECIFIC SITUATION.
14. ROCK & DEBRIS (LARGER THAN 1" IN DIAMETER) IN PLANTING AREAS SHALL BE REMOVED.
15. PROTECT EXISTING TREES TO REMAIN DURING CONSTRUCTION, SEE SPECIFICATIONS.
16. ALL PLANTING AREAS TO BE IRRIGATED BY AN UNDERGROUND IRRIGATION SYSTEM. SEE IRRIGATION PLANS.
17. PLANT SPACING SHALL BE COORDINATED WITH VALVE BOX LOCATIONS. CONFIRM ALL ADJUSTMENTS TO PLANT SPACING WITH OWNER'S REPRESENTATIVE PRIOR TO INSTALLATION.
18. CONTRACTOR SHALL NOT PLANT TREES UNDER EXISTING POWER LINES. IF EXISTING POWER LINES EXIST AND TREES ARE PROPOSED THEN THE CONTRACTOR SHALL NOT PLANT WITHOUT THE EXPRESSED CONSENT OF THE OWNER'S REPRESENTATIVE.
19. CONTRACTOR SHALL NOT INSTALL PLANTS WITHIN CLOSE PROXIMITY TO UTILITY VAULTS OR FIRE HYDRANTS. KEEP 5'-0" CLEARANCE FROM ALL HYDRANTS AND UTILITY VAULTS UNLESS OTHERWISE NOTED IN PLANS
20. WHERE TREES ARE PLANTED IN ROWS, THEY SHALL BE UNIFORM IN SIZE AND SHAPE.
21. TREES AND SHRUBS PROVIDED SHALL BE FULL, WITH BALANCED CREATING A UNIFORM OVERALL SHAPE AND HEIGHT. SHRUBS WITH MULTI BRANCHING FORMS SHALL HAVE AN OPEN AND SYMMETRICAL APPEARANCE TO BRANCH STRUCTURE WITH AT LEAST 4" CLEARANCE BETWEEN BRANCHES.
22. TREES TO BE PLANTED SUCH THAT LOWEST BRANCHES ARE PARALLEL TO THE ADJACENT ROADWAY OR SIDEWALK. SEE SHEET DETAILS REGARDING TREE PLANTING REQUIREMENTS.
23. CONTRACTOR WILL CONFIRM ALL ADJUSTMENTS TO TREE LAYOUT SPACING BEFORE INSTALLATION. CONTRACTOR IS RESPONSIBLE TO VERIFY THAT FIELD CONDITIONS ALLOW FOR PROPOSED LANDSCAPE AND TREE PLANTINGS. IF CONFLICTS EXIST OR COULD EXIST, CONTRACTOR SHALL NOTIFY OWNER FOR A SOLUTION.
24. ALL PLANT MATERIAL SHALL BE SPACED AND LOCATED PER PLAN. IF CONFLICTS ARISE BETWEEN ACTUAL SIZE OF AREA AND PLANS, CONTRACTOR SHALL CONTACT OWNER FOR RESOLUTION. FAILURE TO MAKE SUCH CONFLICTS KNOWN WILL RESULT IN CONTRACTOR'S LIABILITY TO RELOCATE PLANT MATERIALS.
25. CONTRACTOR TO SLIGHTLY ADJUST PLANT LOCATIONS IN THE FIELD AS NECESSARY TO BE CLEAR OF DRAINAGE SWALES AND UTILITIES. IF SIGNIFICANT RELOCATIONS ARE REQUIRED, CONTRACTOR SHALL CONTACT OWNER FOR RESOLUTION. FAILURE TO MAKE SUCH RELOCATIONS KNOWN WILL RESULT IN CONTRACTOR'S LIABILITY OF PLANT MATERIALS.
26. TREE STAKING AND GUYING SHALL BE DONE PER DETAILS. CONTRACTOR SHALL ENSURE THAT TREES REMAIN VERTICAL AND UPRIGHT FOR THE DURATION OF THE GUARANTEE PERIOD. GUYS AND STRAPPING SHALL BE REMOVED AFTER ONE GROWING SEASON.
27. THE ROOT CROWN TO BE AT FINISHED GRADE OR NO GREATER THAN A MAXIMUM OF ONE INCH HIGHER (AFTER SETTLING) THAN FINISHED GRADE.
28. ALL SUBSTITUTIONS OF PLANT MATERIALS ARE TO BE REQUESTED IN WRITING TO THE LANDSCAPE ARCHITECT AND APPROVED IN WRITING BY THE OWNER PRIOR TO INSTALLATION. FAILURE TO OBTAIN SUBSTITUTION APPPROVAL IN WRITING MAY RESULT IN LIABILITY TO CONTRACTOR.
29. DEAD PLANTS ARE TO BE REMOVED FROM THE JOB BY THE CONTRACTOR WEEKLY. CONTRACTOR SHALL MAINTAIN AN UPDATED, COMPREHENSIVE LIST OF ALL DEAD MATERIALS REMOVED AND PRESENT A COPY OF THE LIST TO THE OWNER AT THE END OF EVERY MONTH DURING THE CONTRACT PERIOD.
30. ADJUST TREE PLANTING LOCATIONS TO AVOID UNDERGROUND UTILITIES WHERE POSSIBLE. CONTACT OWNER OR LANDSCAPE ARCHITECT FOR A COORDINATION SOLUTION FOR ANY UTILITY CONFLICTS. CONTRACTOR SHALL BE LIABLE FOR DAMAGE TO ANY AND ALL PUBLIC OR PRIVATE UTILITIES.
31. REFER TO PLANTING DETAILS FOR ADDITIONAL PLANTING INFORMATION.
32. ALL PLANTINGS SHALL COMPLY WITH CURRENT LOCAL ORDINANCES AND GUIDELINES.
33. REFER TO THE SOIL AMENDMENT NOTES FOR SOIL MIX SPECIFICATIONS.

1

PLANT MATERIALS SCHEDULE

SYM.	COMMON NAME	BOTANICAL NAME	SIZE	SPACING	QTY
	TREES				
	BOWHALL MAPLE	ACER RUBRUM 'BOWHALL'	3" CAL.	AS SHOWN	24
	CAPITAL PEAR	PYRUS CALLERYANA 'CAPITAL'	3" CAL.	AS SHOWN	45
	PAPERBARK MAPLE	ACER GRISEUM	2" CAL.	AS SHOWN	4
	SHRUBS				
	GREEN BEAUTY BOXWOOD	BUXUS MICROPHYLLA JAPONICA 'GREEN BEAUTY'	3 GAL	3'-0" O.C.	13
	RAIN GARDEN PLANTER				
	DWARF RED-OSIER DOGWOOD	CORNUS SERICEA 'KELSEYI'	2 GAL	30" O.C.	215
	DAY LILY	STELLA D'ORO DAYLILY	1 GAL	24" O.C.	215
	GREEN BEAUTY BOXWOOD	BUXUS MICROPHYLLA JAPONICA 'GREEN BEAUTY'	3 GAL	3'-0" O.C.	28
	'BLUE DART' RUSH	JUNCUS TENUIS 'BLUE DART'	10" TUBE	12" O.C.	TBD
	GRAVEL SWALE				
	2-3 INCH WASHED DRAIN ROCK				

NOTES:

1. TYPICAL PLANTING DETAILS SHOWN TO PROVIDE PLANTING CONCEPT. MINOR ADJUSTMENTS AND PLANT QUANTITY IN THE FIELD MIGHT BE REQUIRED. REFER TO CIVIL PLANS C-6 FOR RAIN GARDEN PLANTER DIMENSIONS.
2. REFER TO LANDSCAPE PLANS LP-2 TO LP-6 FOR PLANTER LOCATIONS
3. PERF PIPE TO HYDRAULICALLY CONNECT RAIN GARDENS, REFER TO CIVIL PLANS.

100% SUBMITTAL

MARK	REVISION DESCRIPTION	BY	APP.	DATE
1	REVISED PLANT MATERIALS SCHEDULE - SPECIES AND QTY'S	ANB	CMB	6/24/14

FEDERAL AID NO.: TAP-6771 (001)
FEDERAL CONTRACT NO: TA-4635
STIP REFERENCE NO.: WA-04259
CITY OF LV PROJECT NO.: 13-2642-S

The City of Longview Washington

AMY BLAIN STATE OF WASHINGTON 39977 REGISTERED PROFESSIONAL ENGINEER

DRAWN BY JBR
DESIGN BY JBR
CHECK BY DS
PROJ MGR DS

CITY OF LONGVIEW
DOWNTOWN STREETSCAPE DESIGN
LANDSCAPE PLAN
NOTES AND PLANT SCHEDULE

DRAWING NO. LP-1
PROJECT NO. VAVAN-12-108
DATE: 10/25/13
SHEET NO. 25 OF 49

Last Saved by: Amyb on: Jun 24, 2014 1:13 PM File: R:\Engineers\PROJECTS_ACTIVE PROJECTS\DOWNTOWN CORRIDOR IMPROVEMENTS\100% Design Documents - FINAL\2013-10-31 - Longview Downtown Streetscape - Civil and Landscape\05_LP01 - REV01 - ADDENDUM 1.dwg

Copyright © BergerABAM. All Rights Reserved.

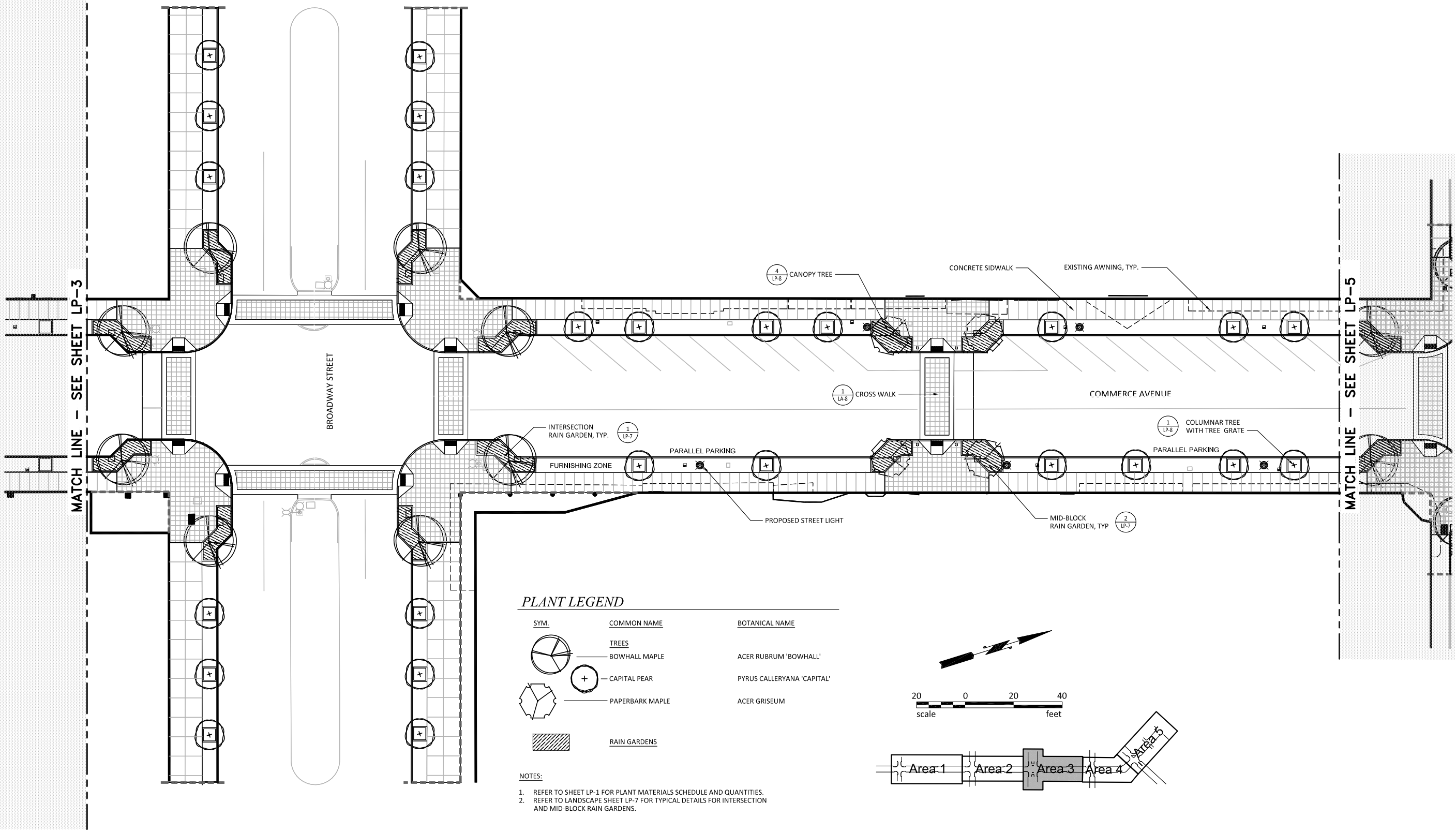

NOTES:

1. REFER TO SHEET LP-1 FOR PLANT MATERIALS SCHEDULE AND QUANTITIES.
2. REFER TO LANDSCAPE SHEET LP-7 FOR TYPICAL DETAILS FOR INTERSECTION AND MID-BLOCK RAIN GARDENS.

100% SUBMITTAL

MARK	REVISION DESCRIPTION	BY	APP.	DATE

FEDERAL AID NO.: TAP-6771 (001)
FEDERAL CONTRACT NO: TA-4635
STIP REFERENCE NO.: WA-04259
CITY OF LV PROJECT NO.: 13-2642-S

The City of Longview Washington

AMY BLAIN STATE OF WASHINGTON 39977 REGISTERED PROFESSIONAL ENGINEER

DRAWN BY JBR
DESIGN BY JBR
CHECK BY DS
PROJ MGR DS

CITY OF LONGVIEW
DOWNTOWN STREETSCAPE DESIGN
LANDSCAPE PLAN
AREA 3

DRAWING NO. **LP-4**
PROJECT NO. VAVAN-12-108
DATE: 10/25/13
SHEET NO. 28 OF 49

Last Saved by: Amyb on: May 22, 2014 9:45 AM File: R:\Engineers\PROJECTS_ACTIVE PROJECTS\DOWNTOWN CORRIDOR IMPROVEMENTS\100% Design Documents - FINAL\2013-10-31 - Longview Downtown Streetscape - Civil and Landscape\05_LP04.dwg

Copyright © BergerABAM. All Rights Reserved.

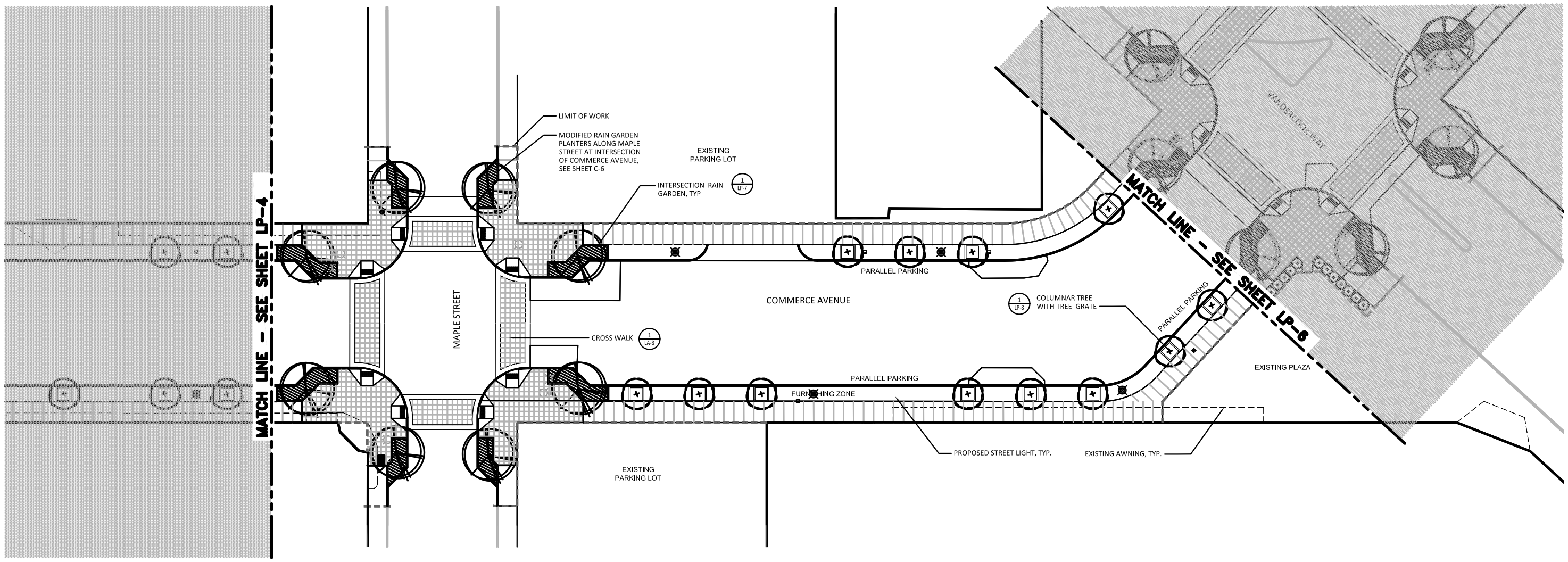

PLANT LEGEND

SYM.	COMMON NAME	BOTANICAL NAME
	TREES	
	BOWHALL MAPLE	ACER RUBRUM 'BOWHALL'
	CAPITAL PEAR	PYRUS CALLERYANA 'CAPITAL'
	PAPERBARK MAPLE	ACER GRISEUM
	SHRUBS	
	GREEN BEAUTY BOXWOOD	BUXUS MICROPHYLLA JAPONICA 'GREEN BEAUTY'
	RAIN GARDENS	

NOTES:

1. REFER TO SHEET LP-1 FOR PLANT MATERIALS SCHEDULE AND QUANTITIES.
2. REFER TO LANDSCAPE SHEET LP-7 FOR TYPICAL DETAILS FOR INTERSECTION AND MID-BLOCK RAIN GARDENS.

20 0 20 40
scale feet

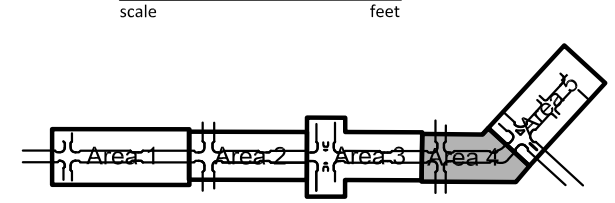

100% SUBMITTAL

MARK	REVISION DESCRIPTION	BY	APP.	DATE

FEDERAL AID NO.: TAP-6771 (001)
FEDERAL CONTRACT NO: TA-4635
STIP REFERENCE NO.: WA-04259
CITY OF LV PROJECT NO.: 13-2642-S

The City of Longview Washington

AMY BLAIN STATE OF WASHINGTON 39977 REGISTERED PROFESSIONAL ENGINEER

DRAWN BY JBR
DESIGN BY JBR
CHECK BY DS
PROJ MGR DS

CITY OF LONGVIEW
DOWNTOWN STREETSCAPE DESIGN
LANDSCAPE PLAN
AREA 4

DRAWING NO. **LP-5**
PROJECT NO. VAVAN-12-108
DATE: 10/25/13
SHEET NO. 29 OF 49

Last Saved by: Amyb on: May 22, 2014 9:47 AM File: R:\Engineers\PROJECTS_ACTIVE PROJECTS\DOWNTOWN CORRIDOR IMPROVEMENTS\100% Design Documents - FINAL\2013-10-31 - Longview Downtown Streetscape - Civil and Landscape\05_LP05.dwg

Copyright © BergerABAM. All Rights Reserved.

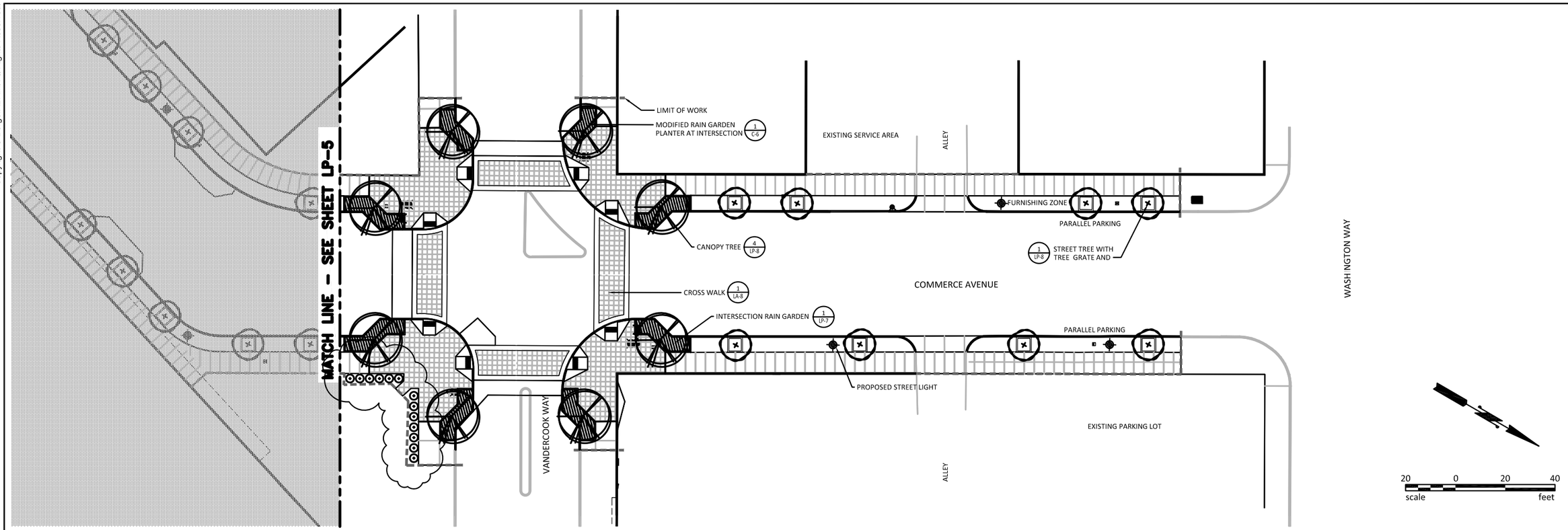

PLANT LEGEND

SYM.	COMMON NAME	BOTANICAL NAME
	TREES	
	BOWHALL MAPLE	ACER RUBRUM 'BOWHALL'
	CAPITAL PEAR	PYRUS CALLERYANA 'CAPITAL'
	PAPERBARK MAPLE	ACER GRISEUM
	SHRUBS	
	GREEN BEAUTY BOXWOOD	BUXUS MICROPHYLLA JAPONICA 'GREEN BEAUTY'
	RAIN GARDENS	

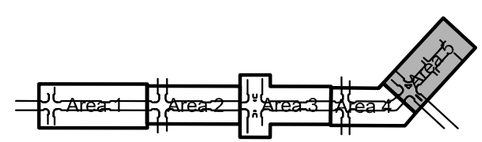

NOTES:

1. REFER TO SHEET LP-1 FOR PLANT MATERIALS SCHEDULE AND QUANTITIES.
2. REFER TO LANDSCAPE SHEET LP-7 FOR TYPICAL DETAILS FOR INTERSECTION AND MID-BLOCK RAIN GARDENS.

100% SUBMITTAL

MARK	REVISION DESCRIPTION	BY	APP.	DATE
1	ADD SHRUBS IN COLUMBIA THEATRE PLAZA	ANB	CMB	6/30/14

FEDERAL AID NO.: TAP–6771 (001)
FEDERAL CONTRACT NO: TA–4635
STIP REFERENCE NO.: WA–04259
CITY OF LV PROJECT NO.: 13–2642–S

The City of Longview Washington

AMY BLAIN STATE OF WASHINGTON 39977 REGISTERED PROFESSIONAL ENGINEER

DRAWN BY JBR
DESIGN BY JBR
CHECK BY DS
PROJ MGR DS

CITY OF LONGVIEW
DOWNTOWN STREETSCAPE DESIGN
LANDSCAPE PLAN
AREA 5

DRAWING NO. **LP-6**
PROJECT NO. VAVAN-12-108
DATE: 10/25/13
SHEET NO. 30 OF 49

Last Saved by: Amyb on: May 22, 2014 1:18 PM File: R:\Engineers\PROJECTS_ACTIVE PROJECTS\DOWNTOWN CORRIDOR IMPROVEMENTS\100% Design Documents - FINAL\2013-10-31 - Longview Downtown Streetscape - Civil and Landscape\05_LP06.dwg

Copyright © BergerABAM. All Rights Reserved.

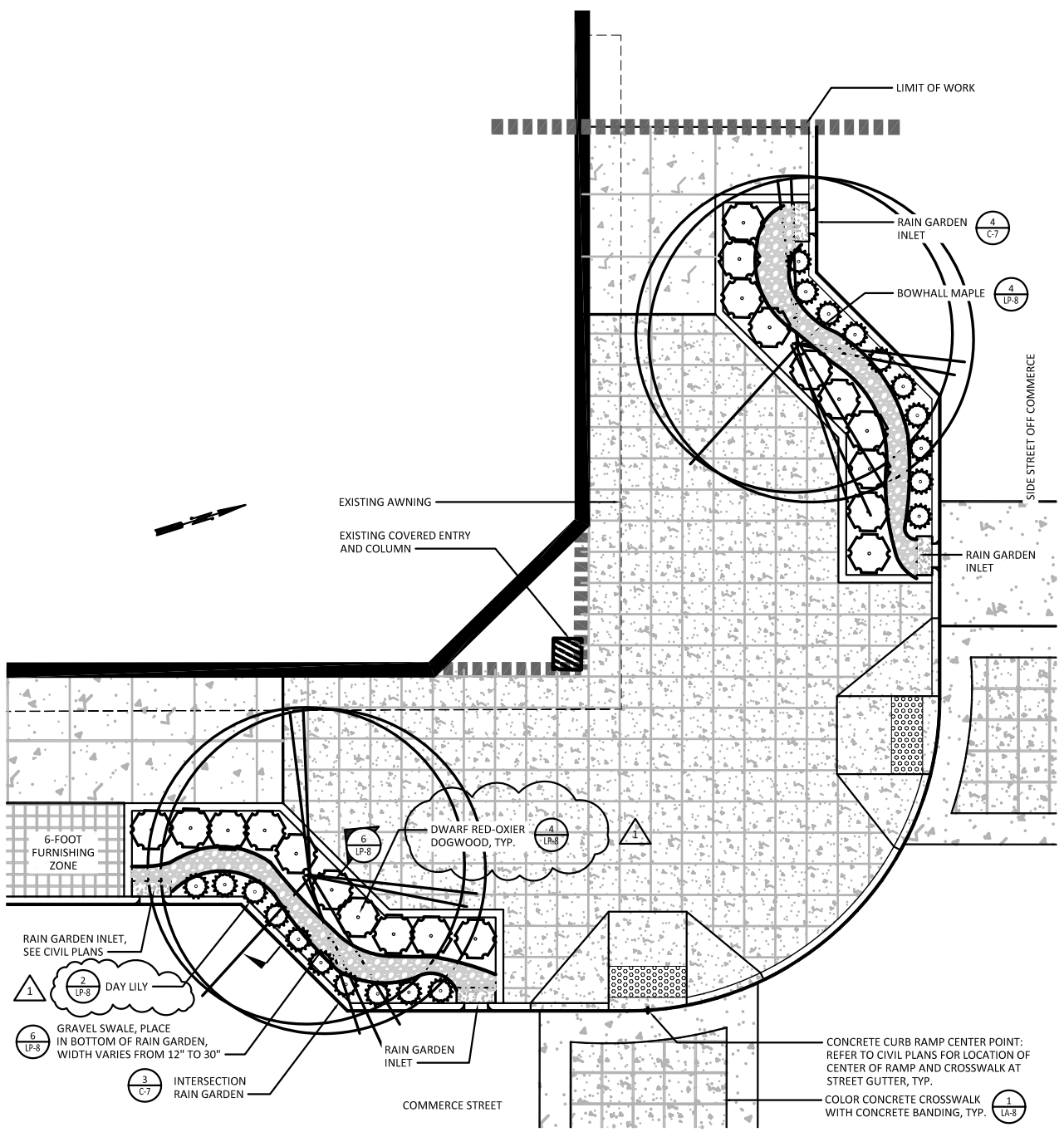

1 LP-7 INTERSECTION RAIN GARDEN DETAIL, TYP.
SCALE: 1"=5'

PLANT LEGEND

SYM.	COMMON NAME	BOTANICAL NAME
	TREES	
	BOWHALL MAPLE	ACER RUBRUM 'BOWHALL'
	CAPITAL PEAR	PYRUS CALLERYANA 'CAPITAL'
	PAPERBARK MAPLE	ACER GRISEUM
	RAIN GARDEN PLANTER	
	DWARF RED-OSIER DOGWOOD	CORNUS SERICEA 'KELSEYI'
	GREEN BEAUTY BOXWOOD	BUXUS MICROPHYLLA JAPONICA 'GREEN BEAUTY'
	DAY LILY	STELLA D'ORB DAYLILY
	'BLUE DART' RUSH	JUNCUS TENUIS 'BLUE DART'
	GRAVEL SWALE 2-3 INCH WASHED DRAIN ROCK	

NOTES:

1. TYPICAL PLANTING DETAILS SHOWN TO PROVIDE PLANTING CONCEPT. MINOR ADJUSTMENTS AND PLANT QUANTITY IN THE FIELD MIGHT BE REQUIRED. REFER TO CIVIL PLANS C-6 FOR STORMWATER PLANTER DIMENSIONS.
2. REFER TO LANDSCAPE PLANS LP-1 TO LP-6 FOR PLANTER LOCATIONS
3. PERF PIPE TO BYDRAULICALLY CONNECT RAIN GRADENS, REFER TO CIVIL PLANS.

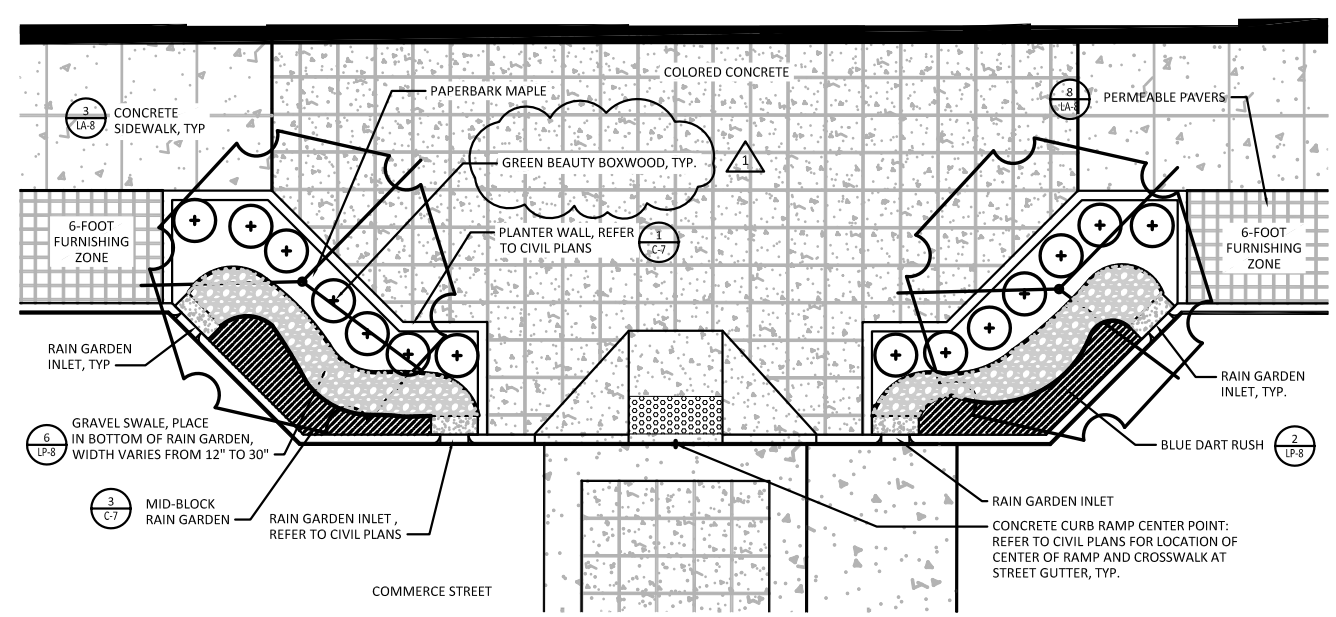

2 LP-7 MID-BLOCK RAIN GARDEN DETAIL, TYP.
SCALE: 1"=5'

100% SUBMITTAL

MARK	REVISION DESCRIPTION	BY	APP.	DATE
1	DELETE CREEPING GRAPE; ADD BOXWOOD AND DAYLILY	ANB	CMB	6/24/14

FEDERAL AID NO.: TAP–6771 (001)
FEDERAL CONTRACT NO: TA–4635
STIP REFERENCE NO.: WA–04259
CITY OF LV PROJECT NO.: 13–2642–S

The City of Longview Washington

AMY BLAIN STATE OF WASHINGTON 39977 REGISTERED PROFESSIONAL ENGINEER

DRAWN BY JBR
DESIGN BY JBR
CHECK BY DS
PROJ MGR DS

CITY OF LONGVIEW
DOWNTOWN STREETSCAPE DESIGN
LANDSCAPE DETAILS
INTERSECTION & MID-BLOCK ENLARGEMENTS

DRAWING NO. LP-7
PROJECT NO. VAVAN-12-108
DATE: 10/25/13
SHEET NO. 31 OF 49

Last Saved by: Amyb on: Jun 24, 2014 1:00 PM File: R:\Engineers\PROJECTS_ACTIVE PROJECTS\DOWNTOWN CORRIDOR IMPROVEMENTS\100% Design Documents - FINAL\2013-10-31 - Longview Downtown Streetscape - Civil and Landscape\05_LP07 - REV01 ADDENDUM 1.dwg

Copyright © BergerABAM. All Rights Reserved.

NOTE:
TREE STAKING. PROVIDE 10 GA. WIRE CONNECTED TO OPPOSITE CORNER EYE BOLT (WIRES TO CROSS TOP OF ROOT BALL). TIGHTEN WIRE SNUG TO ROOTBALL WITHOUT BREAKING ROOTBALL. PLACE RUBBER HOSE AROUND WIRE WHERE WIRE IS ADJACENT TO TREE TRUNK

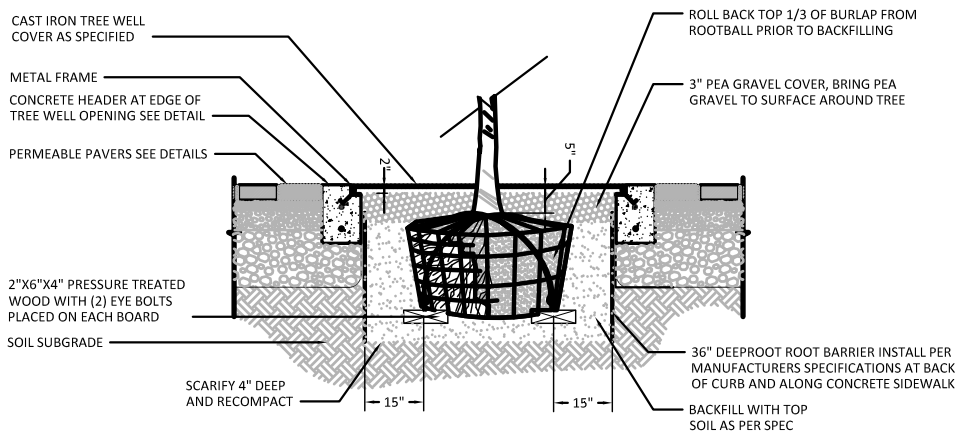

1 LP-8 TREE GRATE PLANTING
SCALE: N.T.S.

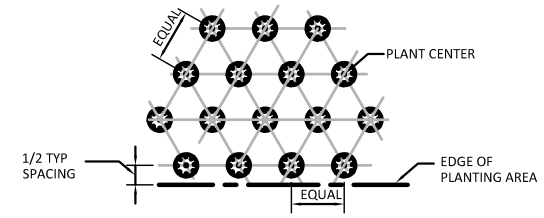

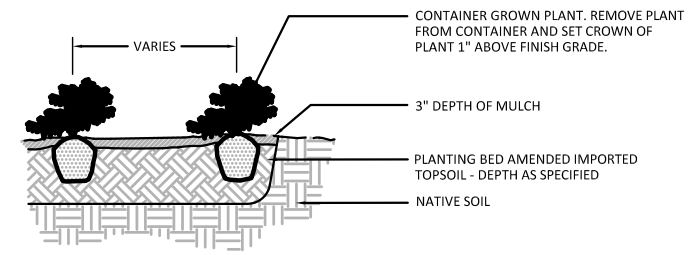

NOTE:
1. LOCATE GROUNDCOVER ONE HALF OF SPECIFIED SPACING DISTANCE FROM ANY CURB, SIDEWALK, OR OTHER HARD SURFACE, UNLESS OTHERWISE SPECIFIED
2. ALL GROUNDCOVER SHALL BE PLANTED AT EQUAL TRIANGULAR SPACING PER ON CENTER SPACING AS SPECIFIED ON PLANTING PLAN

2 LP-8 GROUND COVER PLANTING
SCALE: NTS

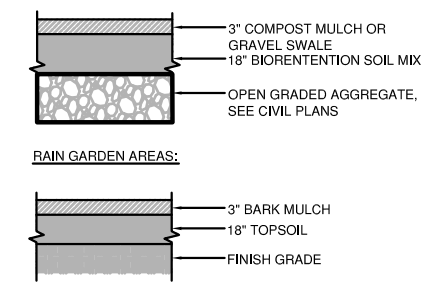

3 LP-8 TYPICAL SOIL PREPARATION
SCALE: N.T.S.

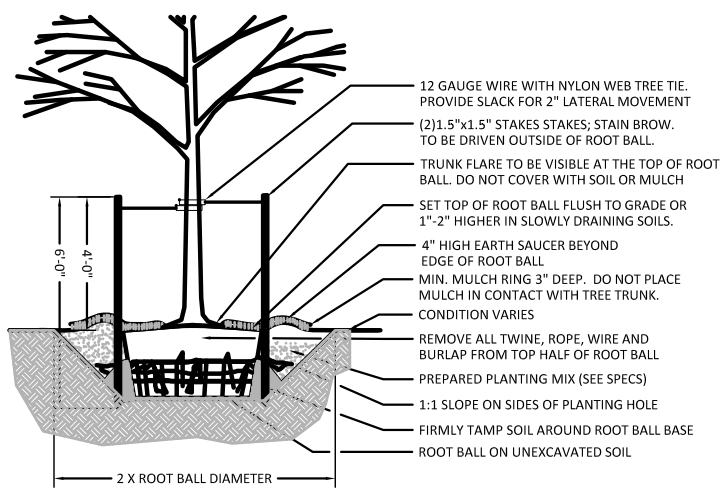

NOTE: IN RAIN GARDEN AREAS, SET TOP OF ROOT BALL CROWN 1" ABOVE BOTTOM FINISH GRADE AT BOTTOM OF RAIN GARDEN.

4 LP-8 DECIDUOUS BALLED/BURLAP TREE PLANTING DETAIL
SCALE: NTS

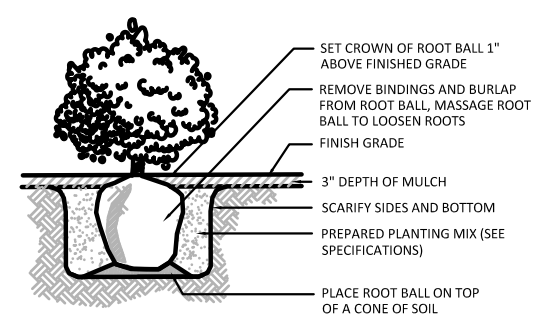

NOTES:
1. ALL COMPONENTS (PLANTS, SOIL, MULCH) ARE REQUIRED FOR STORMWATER FUNCTION.
2. PROTECT RAIN GARDENS FROM SILT, SEDIMENT AND CONSTRUCTION DEBRIS THROUGHOUT CONSTRUCTION PER SPECIFICATIONS.
3. EDGE CONDITIONS VARY. SEE LAYOUT PLANS FOR ADDITIONAL INFORMATION.

5 LP-8 SHRUB PLANTING DETAIL
SCALE: NTS

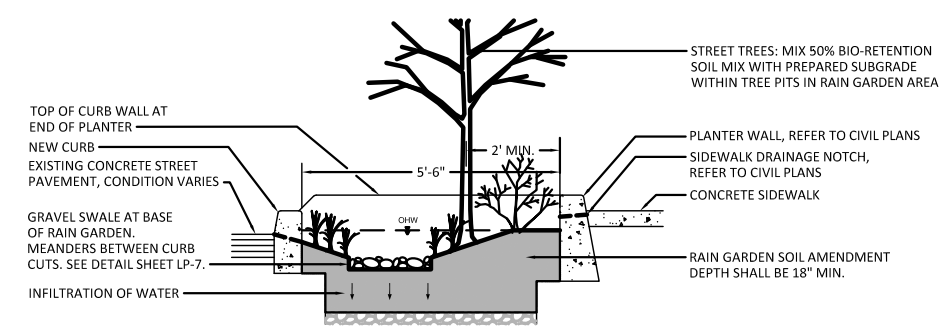

NOTES:
1. REFER TO LANDSCAPE PLANS SHEETS LP-1 THROUGH LP-6 FOR LOCATION OF RAIN GARDEN.
2. REFER TO CIVIL SHEET C-7 FOR RAIN GARDEN SPECIFICATIONS.
3. REFER TO SHEET LP-7 FOR RAIN GARDEN PLANTING LEGEND

6 LP-8 RAIN GARDEN PLANTING DETAIL
SCALE: NTS

100% SUBMITTAL

MARK	REVISION DESCRIPTION	BY	APP.	DATE

FEDERAL AID NO.: TAP-6771 (001)
FEDERAL CONTRACT NO: TA-4635
STIP REFERENCE NO.: WA-04259
CITY OF LV PROJECT NO.: 13-2642-S

The City of Longview Washington

AMY BLAIN STATE OF WASHINGTON 39977 REGISTERED PROFESSIONAL ENGINEER

DRAWN BY JBR
DESIGN BY JBR
CHECK BY DS
PROJ MGR DS

CITY OF LONGVIEW
DOWNTOWN STREETSCAPE DESIGN
LANDSCAPE DETAILS

DRAWING NO. LP-8
PROJECT NO. VAVAN-12-108
DATE: 10/25/13
SHEET NO. 32 OF 49

Last Saved by: juanita.rogers on: Jan 21, 2014 5:03 PM File: R:\Engineers\PROJECTS_ACTIVE PROJECTS\DOWNTOWN CORRIDOR IMPROVEMENTS\100% Design Documents - FINAL\2013-10-31 - Longview Downtown Streetscape - Civil and Landscape\05_LP08.dwg

Copyright © BergerABAM. All Rights Reserved.

STANDARD IRRIGATION NOTES:

1. WORK AND MATERIALS SHALL BE IN STRICT ACCORDANCE WITH THE LATEST CODES, REGULATIONS AND OTHER APPLICABLE LAWS. NOTHING IN THE CONTRACT DOCUMENTS IS TO BE CONSTRUED TO PERMIT WORK NOT CONFORMING TO THESE CODES.
2. INSTALLATION AND MAINTENANCE OF IRRIGATION SYSTEM SHALL BE PER BEST MANAGEMENT PRACTICES PER IRRIGATION ASSOCIATION WWW.IRRIGATION.ORG.
3. CONTRACTOR SHALL REVIEW RECORDS RELATIVE TO THE EXISTING UNDERGROUND UTILITIES. CALL UTILITY LOCATION SERVICES PRIOR TO START OF WORK. THE CONTRACTOR IS RESPONSIBLE FOR LOCATING AND AVOIDING DAMAGE TO THE UTILITIES AND SHALL RESTORE ALL DAMAGED UTILITIES AT THEIR EXPENSE. NOTIFY CONTRACTING OFFICER IMMEDIATELY IF UTILITIES NOT SHOWN ON THE RECORDS ARE ENCOUNTERED. SEE CIVIL DRAWINGS.
4. WATER PRESSURE TEST IS REQUIRED AT THE POINT OF CONNECTION PRIOR TO THE IRRIGATION SYSTEM INSTALLATION. PRESSURE TEST MUST BE WITNESSED BY CITY. TEST RESULTS TO BE SUBMITTED TO THE OWNER. A PERMANENT PRESSURE GAUGE SHALL BE INSTALLED AFTER THE BACKFLOW PREVENTOR FOR EACH POINT OF CONNECTION.
5. DUE TO THE SCALE OF DRAWINGS, IT IS NOT POSSIBLE TO INDICATE ALL OFFSETS, FITTINGS, SLEEVES, ETC. WHICH MAY BE REQUIRED. THE CONTRACTOR SHALL CAREFULLY INVESTIGATE THE STRUCTURAL AND FINISHED CONDITIONS AFFECTING ALL WORK AND PLAN ACCORDINGLY. DRAWINGS ARE GENERALLY DIAGRAMMATIC AND INDICATIVE OF THE WORK TO BE INSTALLED. THE WORK SHALL BE INSTALLED IN SUCH A MANNER AS TO AVOID CONFLICTS BETWEEN IRRIGATION SYSTEM, PLANTING, ARCHITECTURAL FEATURES, FENCING AND UTILITIES. IRRIGATION LINES SHOWN IN PAVING PARALLEL TO PLANTING BEDS SHALL BE LOCATED IN PLANTED AREAS ADJACENT TO PAVING, IRRIGATION LINES AND WIRING UNDER PAVEMENT OR PAVERS SHALL BE SLEEVED.
6. ALL SPRINKLER ARCS, NOZZLE SIZES AND LOCATIONS TO BE ADJUSTED TO PROVIDE ADEQUATE COVERAGE AND TO ELIMINATE OVER SPRAY ON ADJACENT PAVEMENT, BUILDINGS, FENCES, ETC.
7. ALL REMOTE CONTROL VALVES TO BE PROPERLY ADJUSTED FOR CORRECT OPERATING PRESSURE OF IRRIGATION DISTRIBUTION EQUIPMENT.
8. CONTRACTOR TO VERIFY QUANTITY AND SIZE OF IRRIGATION SLEEVING CONDUIT AND SUBMIT FINAL LOCATION TO CITY FOR APPROVAL. SLEEVES IN MANY CASES WILL NEED TO BE COORDINATED WITH THE POURING OF CONCRETE. HYDRAULIC BORING OF SLEEVES IS NOT PERMITTED.
9. DO NOT ALLOW HORIZONTAL PIPE ELEVATION CHANGES TO EXCEED THE CAPACITY OF A SPRINKLER'S BUILT-IN CHECK VALVE. IN LINE CHECK VALVES MAY BE REQUIRED TO AVOID EXCESSIVE DRAINAGE AT THE LOWEST IRRIGATION HEAD ON A LINE.
10. LOCATE VALVES AND QUICK COUPLER VALVES IN BEDS AT LEAST 24-INCHES OFF HARDSCAPE EDGES. DO NOT INSTALL WITHIN THE BOTTOM OF RAIN GARDENS OR IN A PLACE WHERE IT CAN FILL UP WITH WATER. PLACE VALVE BOXES WHERE THEY CAN SELF DRAIN EASILY. VALVE BOXES FULL OF WATER WILL BE REJECTED AT FINAL WALK THROUGH.
11. PROVIDE A MINIMUM OF TWO SPARE CONTROL WIRES FROM CONTROLLER TO ALL SEGMENTS OF MAIN LINE(S).
12. COORDINATE WORK WITH ALL TRADES TO AVOID CONFLICTS WITH OTHER SITE IMPROVEMENTS.
13. CONTRACTOR IS REQUIRED TO FLUSH AND TEST SYSTEM MAINLINE AND LATERALS. PROVIDE ONE ISOLATION VALVE BEFORE EACH CONTROL ZONE VALVE FOR MAINTENANCE. FLUSH AND TEST MUST BE WITNESSED BY CITY. CONTRACTOR SHALL SUBMIT FLUSHING PLAN TO CITY DESCRIBING VOLUME, POINT OF DISCHARGE, WATER CONTROL AND DECHLOR. CHLORINATED WATER MAY NOT BE DISCHARGED TO STORM SYSTEM.
14. INSTALL ALL IRRIGATION PIPE AND CONTROL WIRES IN MINIMUM 6" PVC SLEEVE BELOW ALL PAVED SURFACES UNLESS OTHERWISE INDICATED ON THE PLANS. INSTALL SLEEVES PRIOR TO PLACEMENT OF PAVEMENTS AND PAVEMENT SUB-BASE. SEE PIPE SLEEVING DETAIL FOR FURTHER REQUIREMENTS.
15. COORDINATE IRRIGATION POINTS OF CONNECTION AND LOCATION OF AUTOMATIC CONTROL VALVES WITH CITY.
16. ALL PIPES SHALL BE TRENCHED. PROVIDE POSITIVE DRAINAGE OF MAINLINE. PLACE MANUAL DRAIN AT LOW POINTS IN MAINLINE. IDENTIFY LOCATIONS ON AS-BUILTS.
17. CONTRACTOR IS REQUIRED TO PROVIDE THE CITY WITH A TYPICAL MAINTENANCE SCHEDULE FOR THE FOLLOWING FIRST YEAR OF OPERATION. THE CONTRACTOR WILL ALSO PROVIDE STEP BY STEP INSTRUCTIONS FOR SHUT DOWN (WINTERIZATION) AND FOR START UP AND ANY ONGOING MAINTENANCE. THE CONTRACTOR WILL SUPPLY THE CITY WITH A COLOR CODED AS-BUILT PLAN OF THE SYSTEM AND PLACE A SECOND LAMINATED COPY OF THE MAP AND INSTRUCTIONS IN THE CONTROLLER ENCLOSURE. SEE SPECIFICATIONS. IRRIGATION SYSTEM IS NOT DEEMED COMPLETE UNTIL THESE ITEMS ARE SUBMITTED.
18. IRRIGATION CONTROL IS REQUIRED TO BE ET BASED. IRRIGATION RUN TIMES NEED TO BE ADJUSTED AS NEEDED AUTOMATICALLY BY THE CONTROLLER BASED ON CURRENT WEATHER CONDITIONS. CONTRACTOR SHALL MAKE SURE THAT THE CONTROLLER IS NOT SET TO TURN ON IRRIGATION DURING HIGH USE TIMES OF THE DAY TO AVOID USERS BEING SPRAYED BY WATER. RUN TIME WINDOW TO BE APPROVED BY LONGVIEW CITY MAINTENANCE STAFF PRIOR TO FINAL COMPLETION.
19. NEW ISOLATION VALVE READ AT POINT(S) OF CONNECTION. CONTRACTOR SHALL INSTALL METER PER W-030. CITY WILL PROVIDE METER ONLY, CONTRACTOR IS RESPONSIBLE TO PROVIDE AND INSTALL METER SETTER, BOX, LID, REMOTE READ, PIPE, VALVES AND ALL OTHER FITTINGS.

IRRIGATION MATERIALS AND LEGEND

SYM	DESCRIPTION	GPM	P.S.I.	RADIUS
	RAINBIRD 1806-15 SST PRS 6" POP-UP SPRINKLER	1.21	30	4'X30'
	RAINBIRD 1806-15 EST PRS 6" POP-UP SPRINKLER	.61	30	4'X15'
	RAINBIRD 1404 PRESSURE COMPENSATING FULL CIRCLE BUBBLER ON FIXED RISER IN ROOT WATERING TUBE EACH TREE TO RECEIVE 18" LONG ROOT WATERING MESH TUBE (RAINBIRD MODEL NUMBER RWS-M-B-1404) NOTE: WATERING TUBE SHOWN IN RAIN GARDEN AREAS. DO NOT INSTALL IN BOTTOM OF RAIN GARDEN. INSTALL UP NEAR SIDEWALK WHERE IT WILL NOT FILL UP WITH STORM WATER.	1.0	30	N/A

CONTROLLER VALVES AND APPURTENANCES

P.O.C.

STATION NUMBER
GALLONS PER MINUTE

RAINBIRD MODEL: 100-PGA-PRS-D PRESSURE REGULATING ELECTRIC REMOTE CONTROL VALVE
1" REMOTE CONTROL IRRIGATION VALVE

RAINBIRD CONTROL ZONE KIT FOR DRIP IRRIGATION TO HANGING POTS AT LIGHT POLES MODEL: XCZ-100-PRB-COM
CONTRACTOR SHALL RUN CONDUIT FROM VALVE BOX TO BASE OF LIGHT POLE AND RUN 1/4" TUBING THROUGH POLE UP TO EACH HANGING BASKET. CONTRACTOR IS RESPONSIBLE TO SECURE TUBING TO ENSURE NO KINKS AND THERE SHALL BE NO SPLICE OR REPAIRED 1/4" TUBING THAT IS BELOW GRADE OR WITHIN THE POLE.
CONTRACTOR SHALL INSTALL TUBING AT ONE LIGHT POLE LOCATION TO ILLUSTRATE OPERATION AND HAVE CITY APPROVE INSTALLATION BEFORE PROCEEDING WITH THE REST OF THEM. CONTRACTOR SHALL INSTALL 2 PRESSURE REGULATING EMITTERS PER BASKET. CONTRACTOR IS RESPONSIBLE TO COORDINATE WITH ELECTRICAL TO MAKE SURE CONDUIT IS INSTALLED.
RAINBIRD EMITTER MODEL: XB-T-20-PC-1032

DOUBLE CHECK VALVE BACKFLOW PREVENTION DEVICE
(SEE POINT OF CONNECTION DETAIL FOR ADDITIONAL INFORMATION - SIZE PER LINE SIZE)

RAINBIRD 44-LRC TWO PIECE QUICK COUPLING VALVE (OR APPROVED EQUAL)-

AUTOMATIC CONTROLLER
RAINBIRD TBOS BATTERY OPERATED IRRIGATION CONTROLLER (MODEL: TBOS-4CMUS)
CONTROLLER TO BE MOUNTED AND INSTALLED IN VALVE BOX BELOW GRADE.
ALL WIRING TO BE INSTALLED WITH GREASE PACKED CONNECTIONS WITHIN VALVE BOX.
ONE CONTROLLER PER CITY BLOCK AS SHOWN ON PLANS.

ISOLATION VALVE - SIZE PER LINE SIZE
VALVES AND FITTINGS TO MEET SPECIFIC REQUIREMENTS AS NOTED IN PROJECT SPECIFICATIONS.

PIPE, SLEEVING AND COMMUNICATION WIRE

— W — 1 1/2" - SCH 40 IRRIGATION WATER MAINLINE UNLESS NOTED OTHERWISE

—w— LATERAL PIPE-SCH 40

CONTRACTOR IS RESPONSIBLE TO SIZE IRRIGATION LATERALS ACCORDING TO ACCUMULATED FLOW. PIPE SIZES SHALL BE ADJUSTED IN THE FIELD TO MATCH AS-BUILT CONDITIONS. PIPES THAT ARE UNDERSIZED CAUSING LOW PRESSURE WILL BE REPLACED WITH APPROPRIATE PIPING AT NO ADDITIONAL COST TO THE CONTRACT.

UNDERPAVEMENT SLEEVING. 6" DIAMETER UNLESS OTHERWISE INDICATED. TO BE INSTALLED BY LANDSCAPE CONTRACTOR AT DEPTH AS SHOWN ON DETAIL.

INSTALL METER PER W-030
INSTALL DCVA PER W-310

100% SUBMITTAL

MARK	REVISION DESCRIPTION	BY	APP.	DATE

FEDERAL AID NO.: TAP-6771 (001)
FEDERAL CONTRACT NO: TA-4635
STIP REFERENCE NO.: WA-04259
CITY OF LV PROJECT NO.: 13-2642-S

The City of Longview Washington

AMY BLAIN STATE OF WASHINGTON 39977 REGISTERED PROFESSIONAL ENGINEER

DRAWN BY JBR
DESIGN BY JBR
CHECK BY DS
PROJ MGR DS

CITY OF LONGVIEW
DOWNTOWN STREETSCAPE DESIGN
IRRIGATION PLAN -
NOTES AND LEGEND

DRAWING NO. **IP-1**
PROJECT NO. VAVAN-12-108
DATE: 10/25/13
SHEET NO. 33 OF 49

Last Saved by: Juanita.rogers on: Jan 21, 2014 5:03 PM File: R:\Engineers\PROJECTS_ACTIVE PROJECTS\DOWNTOWN CORRIDOR IMPROVEMENTS\100% Design Documents - FINAL\2013-10-31 - Longview Downtown Streetscape - Civil and Landscape\06_IP01.dwg

Copyright © BergerABAM. All Rights Reserved.

NEW VALVE REQUIRED @ POINT OF CONNECTION

LIMIT OF WORK LINE

POINT OF CONNECTION.
CONTRACTOR IS RESPONSIBLE TO COORDINATE A NEW 1" WATER METER IN A VALVE BOX IN THIS GENERAL LOCATION. EXACT LOCATION TO BE COORDINATED WITH THE CITY OF LONGVIEW. CONTRACTOR IS RESPONSIBLE FOR THE INSTALLATION, TESTING, FEES AND CERTIFICATION IF REQUIRED OF ALL EQUIPMENT. DOUBLE CHECK VALVE BACK FLOW PREVENTOR TO BE INSTALLED IN A SEPARATE VALVE BOX. WATER FLOW TO BE MINIMUM 22 GPM WITH AN OPERATING PRESSURE BETWEEN 50 PSI AND 95 PSI. NOTIFY OWNER IF WATER PRESSURE OR FLOW IS INSUFFICIENT OR TOO HIGH PRIOR TO INSTALLATION OF IRRIGATION EQUIPMENT.

INSTALL METER PER W-030

INSTALL DCVA PER W-310

BATTERY OPERATED AUTOMATIC IRRIGATION CONTROLLER TO BE SET IN A VALVE BOX IN THE LANDSCAPE AREA. THIS CONTROLLER TO OPERATE VALVES ON BOTH SIDES OF CROSSWALK.

3 / IP-7 QUICK COUPLER VALVE FOR SUPPLEMENTAL IRRIGATION.

1 / IP-8 AUTOMATIC REMOTE CONTROL VALVE SET IN LANDSCAPE AREA

SOME LATERALS ARE SHOWN IN PAVED AREAS FOR GRAPHIC CLARITY ONLY. INSTALL ALL LATERALS AND MAINLINES IN LANDSCAPE AREAS OR IN SLEEVES.

4 / IP-8 ROOT WATERING SYSTEM TYPICAL FOR ALL TREE GRATES

1 ½" SCH 40 MAINLINE

14 / 19

13 / 04

SCH 40 LATERAL PIPE

15 / 15

MATCH LINE – SEE SHEET IP-3

BROADWAY

COMMERCE AVENUE

5 / IP-8 SAW CUT EXISTING CONCRETE AND EXCAVATE TO 24" DEPTH TO PLACE 6" DIAMETER SLEEVE.

16 / 14

LATERAL SHOWN OUTSIDE OF SLEEVE FOR VISUAL CLARITY ONLY. ALL IRRIGATION INSTALLED UNDER PAVED SURFACES ARE REQUIRED TO BE IN A SLEEVE.

MATCH LINE – SEE SHEET IP-5

MAPLE STREET

6" SLEEVE TYP U.O.N.

17 / 15

18 / 04

EACH IRRIGATION ZONE IS NOT TO EXCEED 22 GPM OF ACCUMULATED FLOW. CONTRACTOR IS RESPONSIBLE TO PROVIDE THE OWNER WITH A VALVE SCHEDULE AND WITH A MAP OF THE AS-BUILT IRRIGATION INSTALLATION. CONTRACTOR SHALL PROVIDE ALL KEYS AND EQUIPMENT NEEDED TO MAINTAIN THE IRRIGATION SYSTEM FOR A PERIOD OF ONE YEAR.

IRRIGATION SPRAY HEAD LAYOUT IS DIAGRAMMATIC FOR VISUAL CLARITY. CONTRACTOR SHALL ADD OR REMOVE IRRIGATION SPRAY HEADS AS NEEDED TO PROVIDE HEAD TO HEAD COVERAGE IN ALL PLANTING AREAS.

20 0 20 40
scale feet

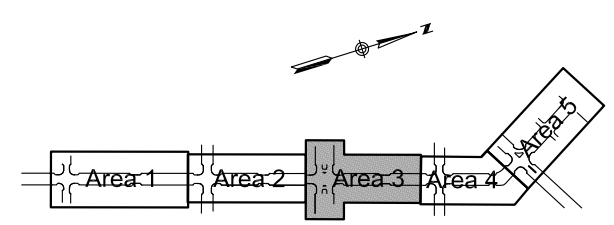

100% SUBMITTAL

MARK	REVISION DESCRIPTION	BY	APP.	DATE

FEDERAL AID NO.: TAP-6771 (001)
FEDERAL CONTRACT NO: TA-4635
STIP REFERENCE NO.: WA-04259
CITY OF LV PROJECT NO.: 13-2642-S

The City of Longview Washington

AMY BLAIN STATE OF WASHINGTON 39977 REGISTERED PROFESSIONAL ENGINEER

DRAWN BY EJC
DESIGN BY EJC
CHECK BY DS
PROJ MGR DS

CITY OF LONGVIEW
DOWNTOWN STREETSCAPE DESIGN
IRRIGATION PLAN
AREA 3

DRAWING NO. **IP-4**
PROJECT NO. VAVAN-12-108
DATE: 10/25/13
SHEET NO. 36 OF 49

Last Saved by: Juanita.rogers on: Jan 21, 2014 5:03 PM File: R:\Engineers\PROJECTS_ACTIVE PROJECTS\DOWNTOWN CORRIDOR IMPROVEMENTS\100% Design Documents - FINAL\2013-10-31 - Longview Downtown Streetscape - Civil and Landscape\06_IP04.dwg

Copyright © BergerABAM. All Rights Reserved.

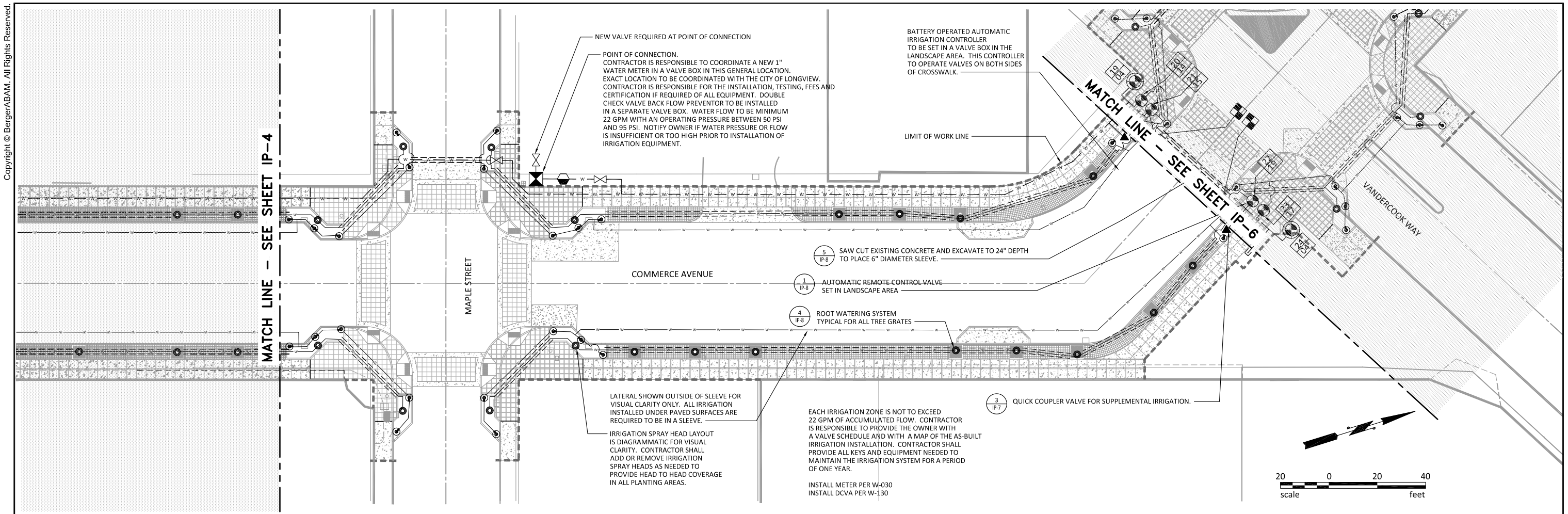

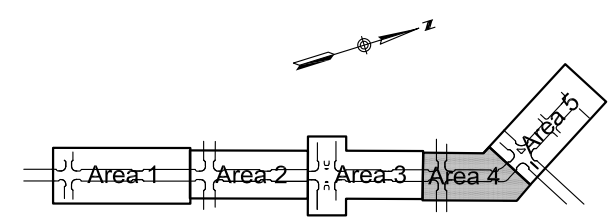

100% SUBMITTAL

MARK	REVISION DESCRIPTION	BY	APP.	DATE

FEDERAL AID NO.: TAP–6771 (001)
FEDERAL CONTRACT NO: TA–4635
STIP REFERENCE NO.: WA–04259
CITY OF LV PROJECT NO.: 13–2642–S

The City of Longview Washington

AMY BLAIN STATE OF WASHINGTON 39977 REGISTERED PROFESSIONAL ENGINEER

DRAWN BY EJC
DESIGN BY EJC
CHECK BY DS
PROJ MGR DS

CITY OF LONGVIEW
DOWNTOWN STREETSCAPE DESIGN
IRRIGATION PLAN
AREA 4

DRAWING NO. **IP-5**
PROJECT NO. VAVAN-12-108
DATE: 10/25/13
SHEET NO. 37 OF 49

Last Saved by: Juanita.rogers on: Jan 21, 2014 5:03 PM File: R:\Engineers\PROJECTS_ACTIVE PROJECTS\DOWNTOWN CORRIDOR IMPROVEMENTS\100% Design Documents - FINAL\2013-10-31 - Longview Downtown Streetscape - Civil and Landscape\06_IP05.dwg

Copyright © BergerABAM. All Rights Reserved.

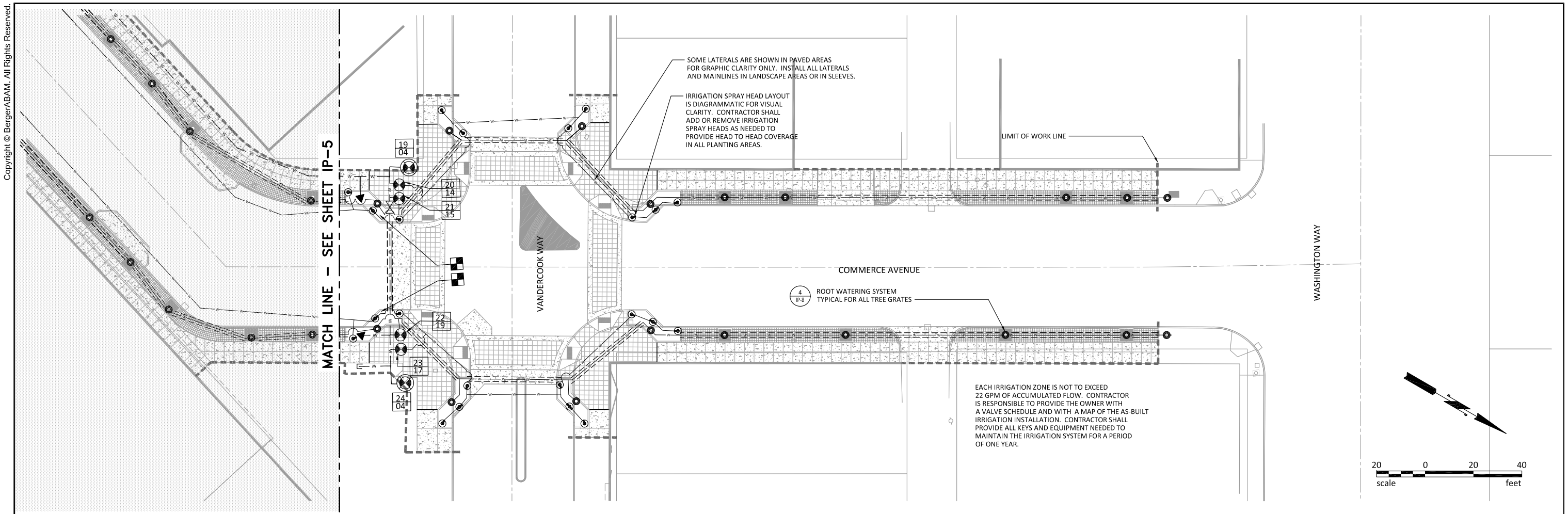

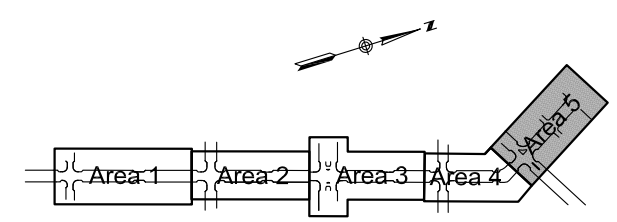

100% SUBMITTAL

MARK	REVISION DESCRIPTION	BY	APP.	DATE

FEDERAL AID NO.: TAP–6771 (001)
FEDERAL CONTRACT NO: TA–4635
STIP REFERENCE NO.: WA–04259
CITY OF LV PROJECT NO.: 13–2642–S

The City of Longview Washington

AMY BLAIN STATE OF WASHINGTON 39977 REGISTERED PROFESSIONAL ENGINEER

DRAWN BY EJC
DESIGN BY EJC
CHECK BY DS
PROJ MGR DS

CITY OF LONGVIEW
DOWNTOWN STREETSCAPE DESIGN
IRRIGATION PLAN
AREA 5

DRAWING NO. **IP-6**
PROJECT NO. VAVAN-12-108
DATE: 10/25/13
SHEET NO. 38 OF 49

Last Saved by: Juanita.rogers on: Jan 21, 2014 5:03 PM File: R:\Engineers\PROJECTS_ACTIVE PROJECTS\DOWNTOWN CORRIDOR IMPROVEMENTS\100% Design Documents - FINAL\2013-10-31 - Longview Downtown Streetscape - Civil and Landscape\06_IP06.dwg

Copyright © BergerABAM. All Rights Reserved.

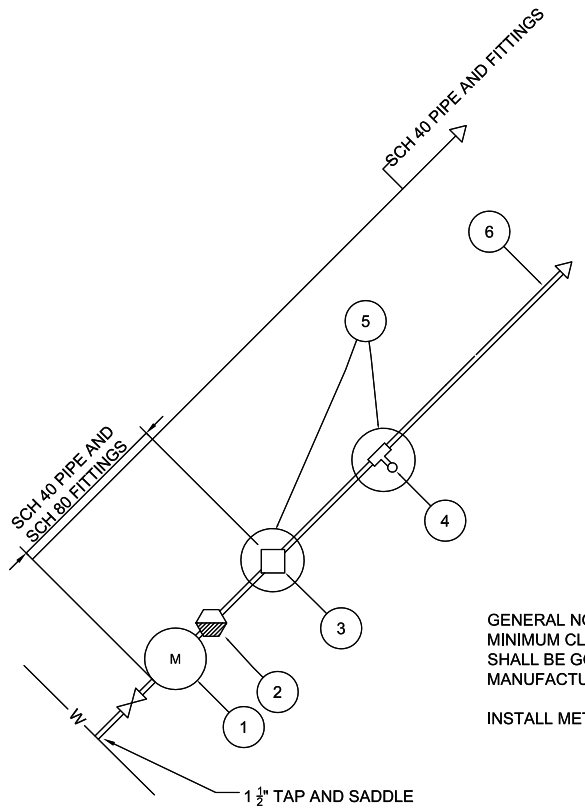

1. 1" WATER METER
2. 1½" DOUBLE CHECK VALVE IN VALVE BOX
3. 1½" ISOLATION VALVE
4. QUICK COUPLER
5. VALVE 12" ROUND
6. 1½" IRRIGATION MAINLINE

GENERAL NOTE:
MINIMUM CLEARANCES BETWEEN ALL COMPONENTS SHOWN ABOVE SHALL BE GOVERNED BY STATE AND LOCAL CODES, OR MANUFACTURERS RECOMMENDATIONS, WHICHEVER IS GREATER.

INSTALL METER PER W-030

1 / IP-7 POINT OF CONNECTION
SCALE: NTS

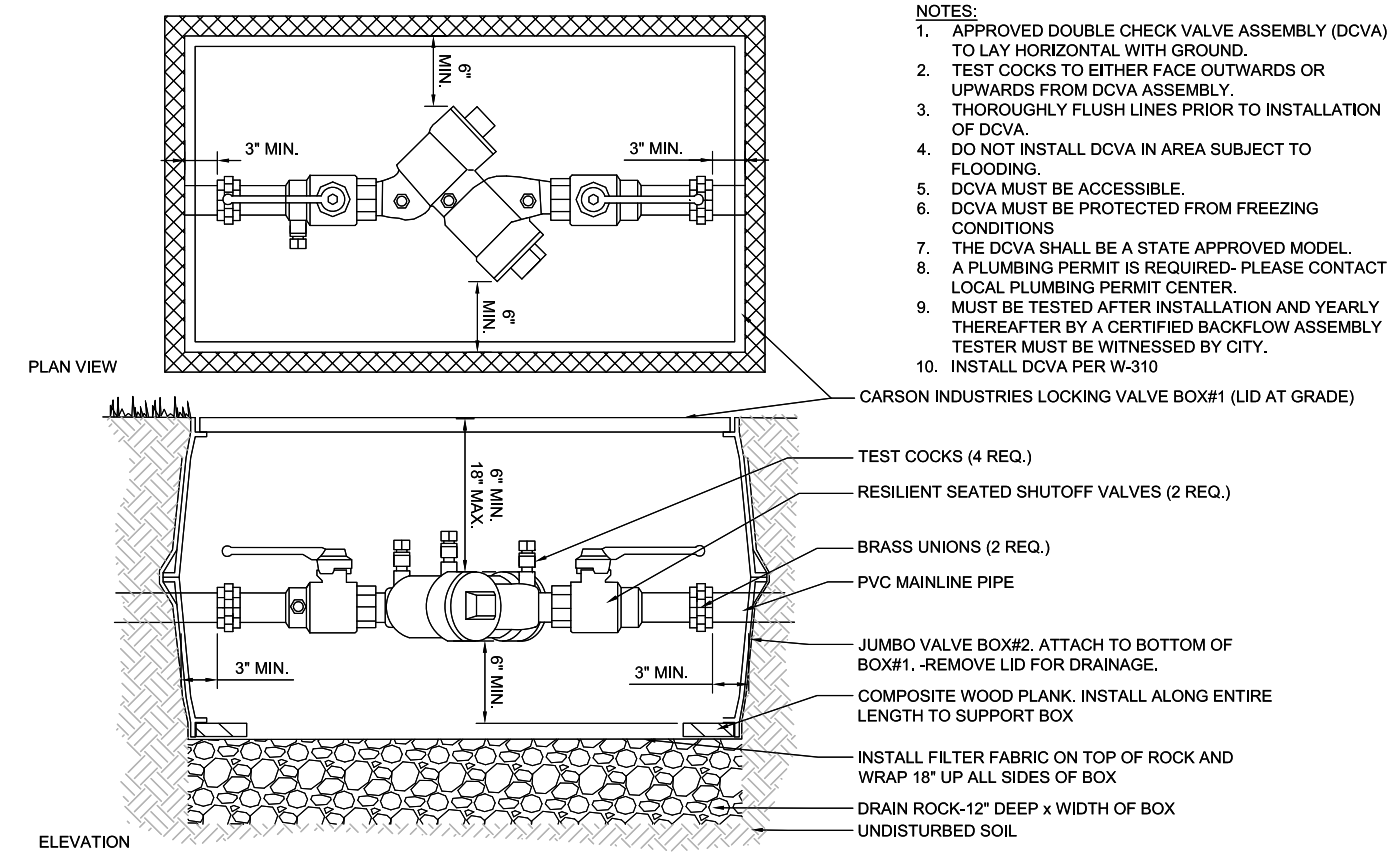

NOTES:
1. APPROVED DOUBLE CHECK VALVE ASSEMBLY (DCVA) TO LAY HORIZONTAL WITH GROUND.
2. TEST COCKS TO EITHER FACE OUTWARDS OR UPWARDS FROM DCVA ASSEMBLY.
3. THOROUGHLY FLUSH LINES PRIOR TO INSTALLATION OF DCVA.
4. DO NOT INSTALL DCVA IN AREA SUBJECT TO FLOODING.
5. DCVA MUST BE ACCESSIBLE.
6. DCVA MUST BE PROTECTED FROM FREEZING CONDITIONS
7. THE DCVA SHALL BE A STATE APPROVED MODEL.
8. A PLUMBING PERMIT IS REQUIRED- PLEASE CONTACT LOCAL PLUMBING PERMIT CENTER.
9. MUST BE TESTED AFTER INSTALLATION AND YEARLY THEREAFTER BY A CERTIFIED BACKFLOW ASSEMBLY TESTER MUST BE WITNESSED BY CITY.
10. INSTALL DCVA PER W-310

2 / IP-7 DOUBLE CHECK BACKFLOW
SCALE: 3/4" = 1'-0"

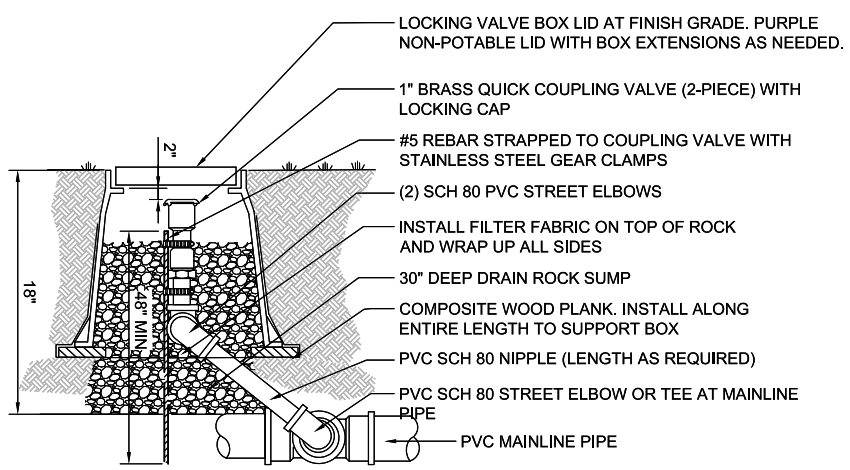

NOTES:
1. ALL THREADED MAINLINE FITTINGS SHALL BE SCH. 80 FITTINGS
2. WRAP ALL THREADED FITTINGS W/ 3 WRAPS OF TEFLON TAPE
3. SWING JOINT SIZE SHALL BE SAME SIZE AS VALVE BOTTOM INLET

3 / IP-7 QUICK COUPLER VALVE
SCALE: 3/4" = 1'-0"

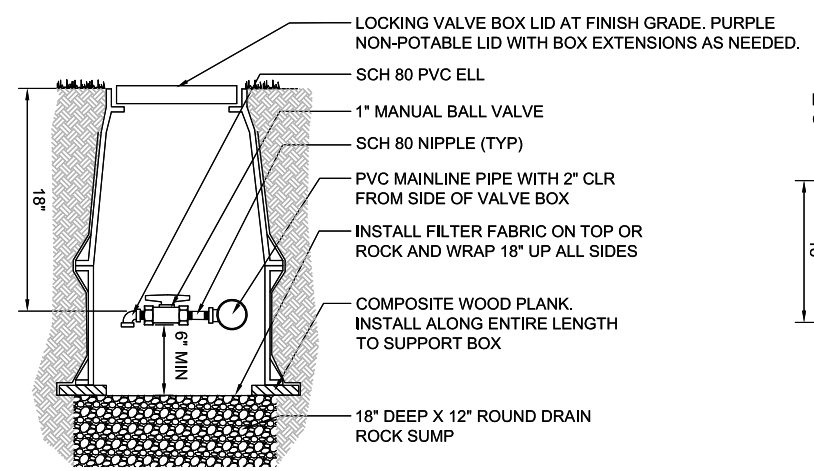

NOTE:
1. ALL THREADED MAINLINE FITTINGS SHALL BE SCH. 80 FITTINGS
2. WRAP ALL THREADED FITTINGS W/ 3 WRAPS OF TEFLON TAPE
3. CONTRACTOR RESPONSIBLE FOR LOCATING DRAIN VALVE AT LOWEST POINT(S) OF MAINLINE TO ENSURE POSITIVE DRAINAGE
4. ALLOW FOR 1" CLEARANCE FROM HOLE IN BOX TO TOP OF PIPE

4 / IP-7 MANUAL DRAIN VALVE
SCALE: 3/4" = 1'-0"

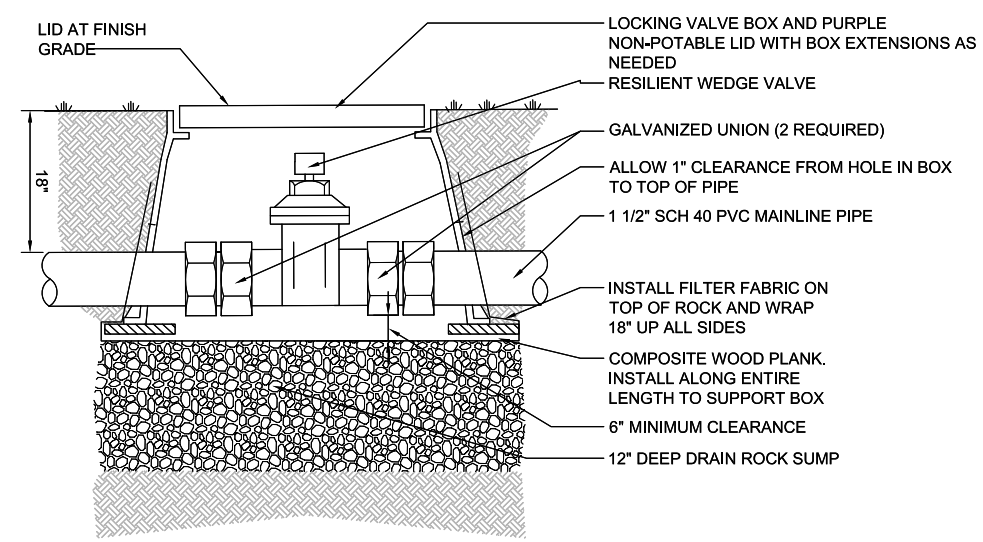

5 / IP-7 MANUAL WEDGE GATE VALVE
SCALE: 3/4" = 1'-0"

100% SUBMITTAL

MARK	REVISION DESCRIPTION	BY	APP.	DATE

FEDERAL AID NO.: TAP-6771 (001)
FEDERAL CONTRACT NO: TA-4635
STIP REFERENCE NO.: WA-04259
CITY OF LV PROJECT NO.: 13-2642-S

The City of Longview Washington

AMY BLAIN STATE OF WASHINGTON 39977 REGISTERED PROFESSIONAL ENGINEER

DRAWN BY EJC
DESIGN BY EJC
CHECK BY DS
PROJ MGR DS

CITY OF LONGVIEW
DOWNTOWN STREETSCAPE DESIGN
IRRIGATION DETAILS

DRAWING NO. IP-7
PROJECT NO. VAVAN-12-108
DATE: 10/25/13
SHEET NO. 39 OF 49

Last Saved by: Juanita.rogers on: Jan 21, 2014 5:03 PM File: R:\Engineers\PROJECTS_ACTIVE PROJECTS\DOWNTOWN CORRIDOR IMPROVEMENTS\100% Design Documents - FINAL\2013-10-31 - Longview Downtown Streetscape - Civil and Landscape\06_IP07.dwg

Copyright © BergerABAM. All Rights Reserved.

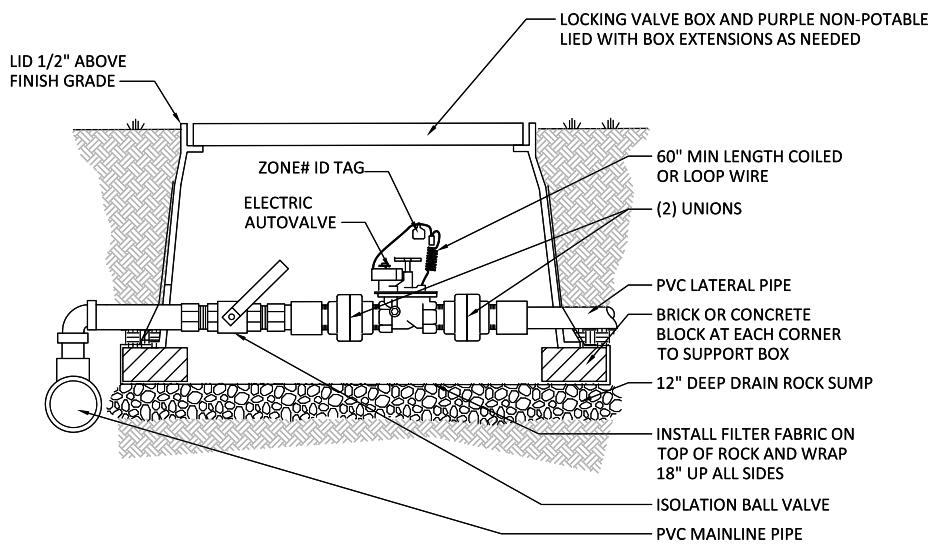

1 / IP - 8 AUTOMATIC REMOTE CONTROL VALVE

SCALE: NTS

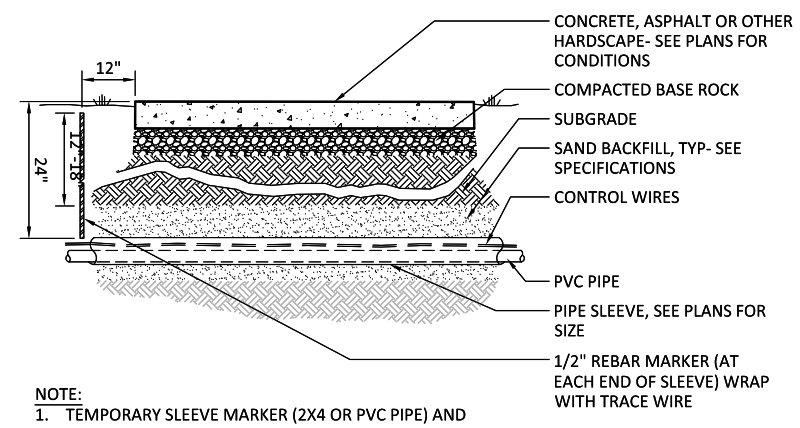

NOTE:
1. TEMPORARY SLEEVE MARKER (2X4 OR PVC PIPE) AND TEMP. PVC SLEEVE CAP. TYPICAL

2 / IP - 8 PIPE & WIRE SLEEVING DETAIL

SCALE: NTS

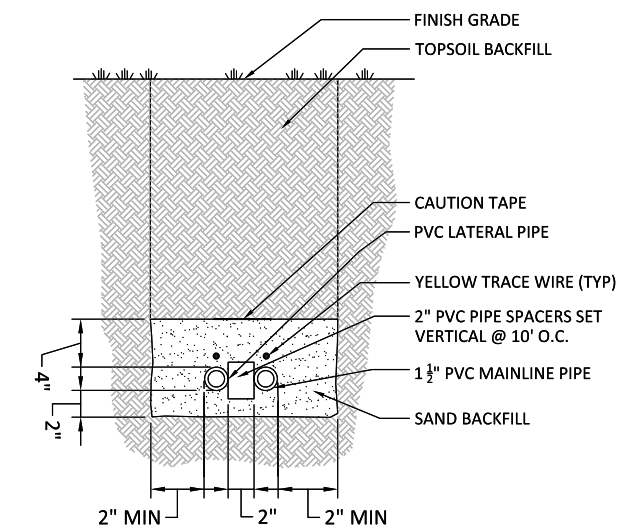

NOTE:
1. SLEEVE BELOW ALL HARDSCAPE ELEMENTS WITH SCHEDULE 40 PVC PIPE
2. FOR PIPE AND WIRE BURIAL DEPTHS SEE SPECIFICATIONS.

3 / IP - 8 TRENCH DETAIL

SCALE: NTS

NOTE:
INSTALL HUNTER FILTER FABRIC SLEEVE OVER ROOT ZONE WATERING SYSTEM OR APPROVED EQUAL.
INSTALL ONE ROOT WATERING SYSTEM PER TREE GRATE.

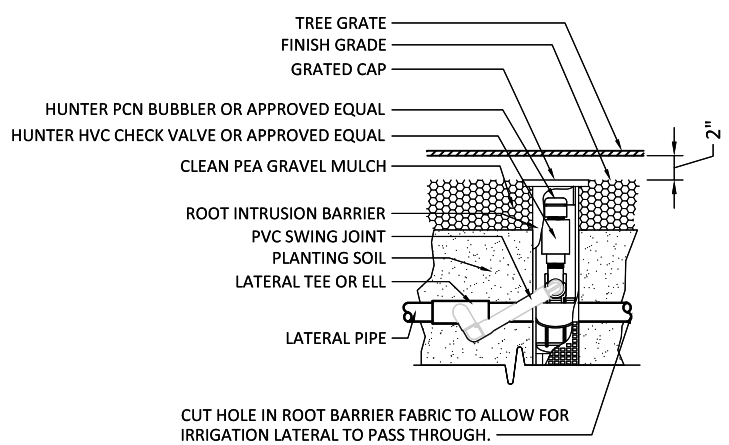

NOTE:
1. BUBBLER FLOW RATE TO BE .25 GALLONS PER MINUTE
2. DETAIL BASED ON HUNTER MODEL RZWS - 18 - CV. PROPOSED PRODUCT SUBSTITUTIONS TO BE SUBMITTED TO OWNER PRIOR TO INSTALLATION. CONTRACTOR IS RESPONSIBLE FOR ALL CHANGES RESULTING FROM SUBSTITUTE PRODUCT, IF APPROVED

4 / IP - 8 ROOT ZONE WATERING SYSTEM

SCALE: NTS

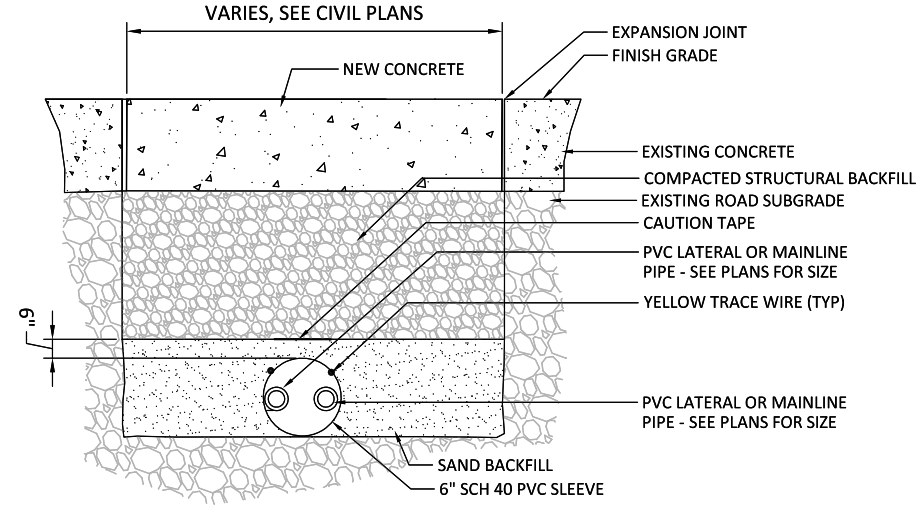

NOTE:
1. SLEEVE BELOW ALL HARDSCAPE ELEMENTS WITH SCHEDULE 40 PVC PIPE
2. FOR PIPE AND WIRE BURIAL DEPTHS SEE SPECIFICATIONS.
3. LOCATE WITHIN TRENCH SUCH THAT SLEEVE TERMINATES IN LANDSCAPE AREA, BOTH SIDES.
4. SAND BACKFILL ON EITHER SIDE OF PVC SLEEVE TO BE MINIMUM 6"

5 / IP - 8 SLEEVE ACROSS ROADWAY DETAIL

SCALE: NTS

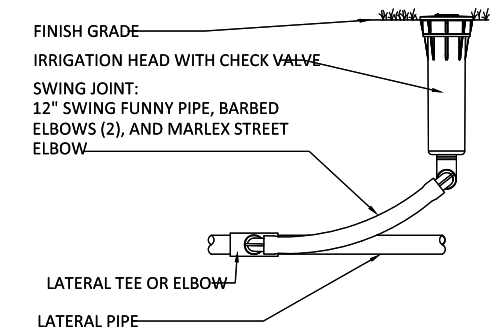

6 / IP - 8 SPRAY HEAD

SCALE: NTS

100% SUBMITTAL

MARK	REVISION DESCRIPTION	BY	APP.	DATE

FEDERAL AID NO.: TAP-6771 (001)
FEDERAL CONTRACT NO: TA-4635
STIP REFERENCE NO.: WA-04259
CITY OF LV PROJECT NO.: 13-2642-S

The City of Longview Washington

AMY BLAIN — STATE OF WASHINGTON — 39977 — REGISTERED PROFESSIONAL ENGINEER

DRAWN BY EJC
DESIGN BY EJC
CHECK BY DS
PROJ MGR DS

CITY OF LONGVIEW
DOWNTOWN STREETSCAPE DESIGN
IRRIGATION DETAILS

DRAWING NO. IP-8
PROJECT NO. VAVAN-12-108
DATE: 10/25/13
SHEET NO. 40 OF 49

Last Saved by: Juanita.rogers on: Jan 21, 2014 5:03 PM File: R:\Engineers\PROJECTS_ACTIVE PROJECTS\DOWNTOWN CORRIDOR IMPROVEMENTS\100% Design Documents - FINAL\2013-10-31 - Longview Downtown Streetscape - Civil and Landscape\06_IP08.dwg

Copyright © BergerABAM. All Rights Reserved.

CONSTRUCTION NOTES (IL02–IL08)

1. EXISTING POLE TO REMAIN. REPLACE EXISTING DECORATIVE FIXTURE WITH STERNBERG 650SR LED BOULEVARD FIXTURE (D650SRLED/5PPT/6ARC45T3/ML).
2. EXISTING LUMINAIRE & POLE TO BE RELOCATED TO PROPOSED LOCATION. REPLACE EXISTING DECORATIVE FIXTURE WITH STERNBERG 650SR LED BOULEVARD FIXTURE (D650SRLED/5PPT/6ARC45T3/ML) PER CITY OF KELSO–LONGVIEW STANDARD PLANS TR–030 AND TR–070. REMOVE EXISTING FOUNDATION TO 3FT BELOW GRADE.
3. EXISTING POLE TO REMAIN. REPLACE EXISTING DECORATIVE FIXTURE WITH STERNBERG 650SR LED BOULEVARD FIXTURE (D650SRLED/5PPT/6ARC45T3/ML) AND REPLACE EXISTING SIGNAL POLE LUMINAIRE FIXTURE WITH CREE XSP1 LED FIXTURE (BXSP–A–O–3–G–A–U).
4. EXISTING LUMINAIRE AND POLE TO BE REMOVED. REMOVE EXISTING FOUNDATION TO 3FT BELOW GRADE.
5. INSTALL STERNBERG 650SR LED BOULEVARD POST TOP FIXTURE (D650SRLED/5PPT/6ARC45T3/ML) ON STERNBERG VIRGINIA ORNAMENTAL POLE (3716FP5/GFI/DBA/DHPA/SH) AT 16FT MOUNTING HEIGHT, PER CITY OF KELSO–LONGVIEW STANDARD PLANS TR–030, TR–070, AND ST–190.
6. INSTALL STERNBERG 650SR LED BOULEVARD FIXTURE WITH STERNBERG PEDESTRIAN LAMP BRACKET (1–D650SRLED/5P/480PM/6ARC45T3/ML) ON STERNBERG VIRGINIA ORNAMENTAL POLE (3716FP5/GFI/DBA/DHPA/SH/BCC) AT 16FT MOUNTING HEIGHT, PER CITY OF KELSO–LONGVIEW STANDARD PLANS TR–030, TR–070, AND ST–190.
7. INSTALL STERNBERG LIGHTED LED BOLLARD (3701LED/3S45TLCA/ML).
8. REMOVE EXISTING LIGHTED BOLLARD. CITY MAINTAINS SALVAGE RIGHTS.
9. REMOVE EXISTING SERVICE CABINET AND ABANDON EXISTING BASE. INSTALL NEW TESCO 3 METER SYSTEM (#24–200–3SC) SERVICE CABINET OUTSIDE THE TRAVELED PATH, PER CITY OF KELSO–LONGVIEW STANDARD PLAN TR–050.
10. INSTALL STERNBERG 650SR LED BOULEVARD FIXTURE WITH STERNBERG PEDESTRIAN LAMP BRACKET (1–D650SRLED/5P/480PM/6ARC45T3/ML) AND CREE XSP1 LED FIXTURE (BXSP–A–O–3–G–A–U) WITH STERNBERG ROADWAY ARM (CAF) ON DECORATIVE CLAM SHELL BASE POLE (95/30/RTS/RBCC3), PER CITY OF KELSO–LONGVIEW STANDARD PLANS TR–040 AND TR–070,.
11. EXISTING SERVICE CABINET TO REMAIN.
12. EXISTING JUNCTION BOX TO REMAIN.
13. EXISTING LUMINAIRE AND POLE TO REMAIN.
14. REMOVE EXISTING JUNCTION BOX. CAP AND ABANDON ANY UNUSED CONDUIT.
15. REMOVE EXISTING JUNCTION BOX. SPLICE CONDUIT FOR CONTINUOUS RUN.
16. REMOVE AND REPLACE EXISTING JUNCTION BOX.

GENERAL NOTES (IL02–IL08)

1. ALL WORK SHALL BE IN ACCORDANCE WITH CITY OF LONGVIEW STANDARDS AND ILLUMINATION AND CONSTRUCTION SPECIFICATIONS TR–010 AND TR–020, AND CITY SPECIAL PROVISIONS.
2. LUMINAIRE LOCATIONS SHALL BE APPROVED BY CITY PRIOR TO FOUNDATION EXCAVATION. CONTRACTOR SHALL VERIFY UTILITY LOCATIONS AT POLE FOUNDATIONS PRIOR TO SUBMITTING MATERIALS. THE CONTRACTOR SHALL SUBMIT A REQUEST TO CITY FOR MATERIALS APPROVAL AT THE EARLIEST POSSIBLE DATE.
3. THE LOCATIONS OF FEATURES SHOWN ARE APPROXIMATE AND SHALL BE VERIFIED IN THE FIELD BY THE CONTRACTOR PRIOR TO CONSTRUCTION WORK.
4. ALL WORK SHALL BE CONSISTENT WITH UTILITY AGENCY REQUIREMENTS. THE CONTRACTOR SHALL CONTACT ALL PERTINENT UTILITY AGENCIES 48 HOURS PRIOR TO COMMENCING WORK AND SHALL COORDINATE WITH AFFECTED UTILITY AGENCIES AND BUSINESS OWNERS THROUGHOUT THE PROJECT.
5. THE CONTRACTOR SHALL BE RESPONSIBLE FOR ANY DAMAGE TO EXISTING UTILITIES. THE CONTRACTOR SHALL NOTIFY THE AFFECTED UTILITY COMPANY AND CITY IMMEDIATELY UPON DAMAGE AND BE RESPONSIBLE FOR REPLACING ANY DAMAGED EQUIPMENT TO THE SATISFACTION OF THE AFFECTED UTILITY COMPANY AND/OR CITY.
6. TOP OF POLE FOUNDATIONS SHALL BE FLUSH WITH BOTTOM OF FINISH SIDEWALK. ANCHOR BOLT PATTERN AND FOUNDATION HARDWARE SHALL MEET MANUFACTURERS REQUIREMENTS.
7. ILLUMINATION JUNCTION BOXES SHALL BE LOCATED WITHIN 10FT OF LUMINAIRE POLES AND OUTSIDE OF ROADWAY AND SIDEWALK SECTIONS. JUNCTION BOX LID TO BE LABELED "LS". ANY JUNCTION BOXES WITHIN SIDEWALK AREAS SHALL HAVE NON–SLIP LIDS.
8. PROPOSED TESCO CABINETS SHALL INCLUDE CONTACTORS FOR EACH LIGHTING CIRCUIT AND AN EXTERIOR PHOTO CELL.
9. PROPOSED POLES, FIXTURES AND HARDWARE COLOR SHALL MATCH EXISTING.
10. PROPOSED JUNCTION BOXES TO BE INSTALLED PER CITY OF LONGVIEW STANDARD PLAN TR–060.

LEGEND (IL01–06)

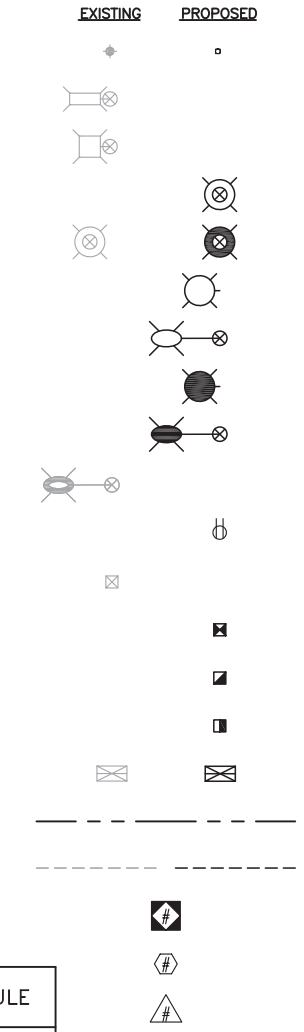

SERVICE 4 CABINET BREAKER SCHEDULE

SERVICE & CIRCUITS	VOLTAGE	LOAD (WATTS)	MAIN BREAKER AMPS	BRANCH BREAKER AMPS	CONTACTOR AMPS
SERVICE	120/240	EX	200	–	–
SIGNAL	120	EX	–	*	
ILLUMINATION CIRCUIT A	240	EX	–	*	*
ILLUMINATION CIRCUIT B	240	EX	–	15	30
POLE OUTLET CIRCUIT B	120	1800	–	20	30
TREE OUTLET CIRCUIT B1	120	1440	–	20	30
TREE OUTLET CIRCUIT B2	120	1080	–	15	15
LIT ART PIECES CIRCUIT B	240	FUTURE	–	15	15
ILLUMINATION CIRCUIT C	240	EX	–	*	*

*MATCH EXISTING SIZING
**ALL BUSS WORK SHALL BE RATED FOR 250 AMPS.

SERVICE 5 CABINET BREAKER SCHEDULE

SERVICE & CIRCUITS	VOLTAGE	LOAD (WATTS)	MAIN BREAKER AMPS	BRANCH BREAKER AMPS	CONTACTOR AMPS
SERVICE	120/240	EX	200	–	–
SIGNAL	120	EX	–	*	
ILLUMINATION CIRCUIT A	240	EX	–	50	60
POLE OUTLET CIRCUIT A	120	1080	–	15	15
TREE OUTLET CIRCUIT A	120	1440	–	20	30
ILLUMINATION CIRCUIT B	240	EX	–	15	30
POLE OUTLET CIRCUIT B1	120	1080	–	15	15
POLE OUTLET CIRCUIT B2	120	1440	–	20	30
TREE OUTLET CIRCUIT B1	120	1620	–	20	30
TREE OUTLET CIRCUIT B2	120	1800	–	20	30
ILLUMINATION CIRCUIT C	240	EX	–	*	*

*MATCH EXISTING SIZING
**ALL BUSS WORK SHALL BE RATED FOR 250 AMPS.

MARK	REVISION DESCRIPTION	BY	APP.	DATE

transpoGROUP
11730 118TH AVENUE NE, SUITE 600
KIRKLAND, WASHINGTON 98034
(TEL) 425 821-3665
(FAX) 425 825-8434

RAYAN PETERSON — STATE OF WASHINGTON — 47363 — REGISTERED PROFESSIONAL ENGINEER

DRAWN BY KLL
DESIGN BY MMG
CHECK BY SKC
PROJ MGR RWP

CITY OF LONGVIEW
DOWNTOWN STREETSCAPE DESIGN
ILLUMINATION NOTES, LEGEND, AND SCHEDULES

DRAWING NO. **IL01**
PROJECT NO. VAVAN-12-108
DATE: 06/06/2014
SHEET NO. 1 OF 10

Last Saved by: Mayrag on: Jun 7, 2014 12:59 PM File: M:\1\111103 Longview Downtown District\Engineering\CAD\Sheets\IL1-IL8.dwg

Copyright © BergerABAM. All Rights Reserved.

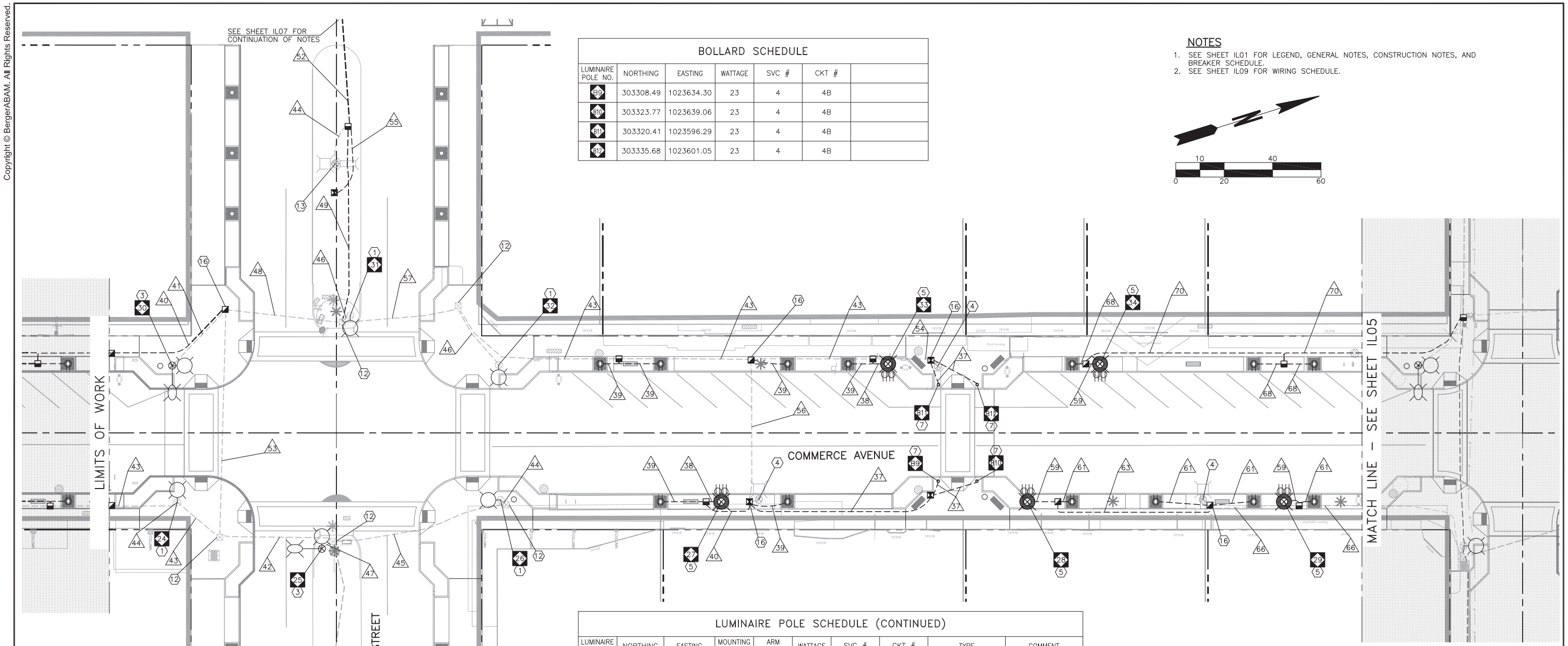

BOLLARD SCHEDULE

LUMINAIRE POLE NO.	NORTHING	EASTING	WATTAGE	SVC #	CKT #	
39	303308.49	1023634.30	23	4	4B	
40	303323.77	1023639.06	23	4	4B	
41	303320.41	1023596.29	23	4	4B	
42	303335.68	1023601.05	23	4	4B	

NOTES

1. SEE SHEET IL01 FOR LEGEND, GENERAL NOTES, CONSTRUCTION NOTES, AND BREAKER SCHEDULE.
2. SEE SHEET IL09 FOR WIRING SCHEDULE.

0 20 10 40 60

LUMINAIRE POLE SCHEDULE (CONTINUED)

LUMINAIRE POLE NO.	NORTHING	EASTING	MOUNTING HEIGHT	ARM LENGTH	WATTAGE	SVC #	CKT #	TYPE	COMMENT
24	EX	EX	EX	EX	96	4	4B	ACORN – POST MOUNT BRACKET	
25	EX	EX	EX	EX	53	4	4B	COBRA – SIGNAL	
			EX	EX	96			ACORN – POST MOUNT BRACKET	
26	EX	EX	EX	EX	96	4	4B	ACORN – POST MOUNT BRACKET	
27	303220.38	1023615.74	16FT	N/A	96	4	4B	ACORN – POST TOP	
28	303341.09	1023653.36	16FT	N/A	96	5	5B	ACORN – POST TOP	
29	303442.28	1023684.90	16FT	N/A	96	5	5B	ACORN – POST TOP	
30	EX	EX	EX	EX	53	4	4B	COBRA – SIGNAL	
			EX	EX	96			ACORN – POST MOUNT BRACKET	
31	EX	EX	EX	EX	96	4	4B	ACORN – POST MOUNT BRACKET	
32	EX	EX	EX	EX	96	4	4B	ACORN – POST MOUNT BRACKET	
33	303303.11	1023581.91	16FT	N/A	96	4	4B	ACORN – POST TOP	
34	303386.68	1023608.01	16FT	N/A	96	5	5B	ACORN – POST TOP	

KEY

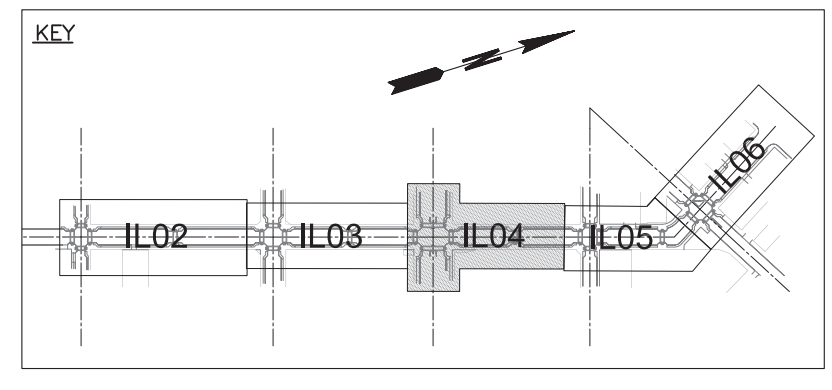

MARK	REVISION DESCRIPTION	BY	APP.	DATE

transpoGROUP
11730 118TH AVENUE NE, SUITE 600
KIRKLAND, WASHINGTON 98034
(TEL) 425 821-3665
(FAX) 425 825-8434

RYAN PETERSON
STATE OF WASHINGTON
47363
REGISTERED PROFESSIONAL ENGINEER
06-09-14

DRAWN BY KLL
DESIGN BY MMG
CHECK BY SKC
PROJ MGR RWP

CITY OF LONGVIEW

DOWNTOWN STREETSCAPE DESIGN

ILLUMINATION PLAN

DRAWING NO. IL04
PROJECT NO. VAVAN-12-108
DATE: 06/06/2014
SHEET NO. 4 OF 10

Last Saved by: Mayrag on: Jun 9, 2014 11:27 AM File: M:\111\111103 Longview Downtown
District\Engineering\CAD\Sheets\IL1-4L8.dwg

Copyright © BergerABAM. All Rights Reserved.

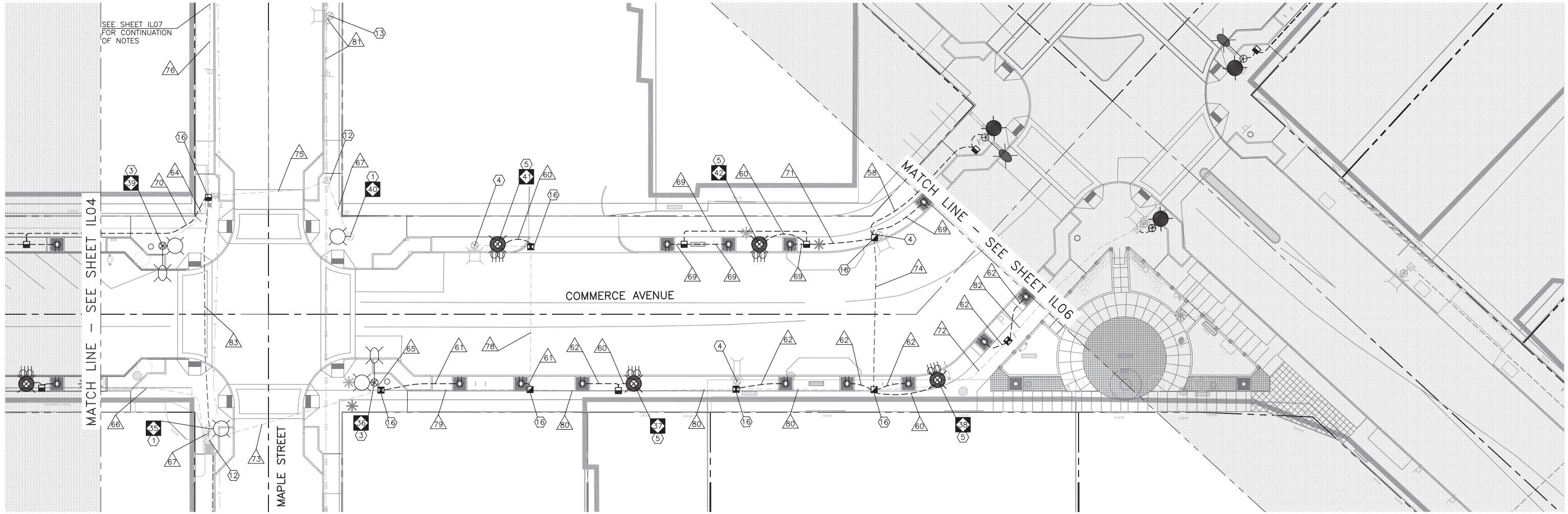

LUMINAIRE POLE SCHEDULE (CONTINUED)									
LUMINAIRE POLE NO.	NORTHING	EASTING	MOUNTING HEIGHT	ARM LENGTH	WATTAGE	SVC #	CKT #	TYPE	COMMENT
35	EX	EX	EX	EX	96	5	5C	ACORN – POST MOUNT BRACKET	
36	EX	EX	EX	EX	53	5	5B	COBRA – SIGNAL	
			EX	EX	96			ACORN – POST MOUNT BRACKET	
37	303678.50	1023758.48	16FT	N/A	96	5	5B	ACORN – POST TOP	
38	303797.08	1023793.85	16FT	N/A	96	5	5B	ACORN – POST TOP	
39	EX	EX	EX	EX	53	5	5B	COBRA – SIGNAL	
			EX	EX	96			ACORN – POST MOUNT BRACKET	
40	EX	EX	EX	EX	96	5	5C	ACORN – POST MOUNT BRACKET	
41	303642.51	1023687.70	16FT	N/A	96	5	5B	ACORN – POST TOP	
42	303744.21	1023719.39	16FT	N/A	96	5	5B	ACORN – POST TOP	

NOTES

1. SEE SHEET IL01 FOR LEGEND, GENERAL NOTES, CONSTRUCTION NOTES, AND BREAKER SCHEDULE.
2. SEE SHEET IL09 FOR WIRING SCHEDULE.

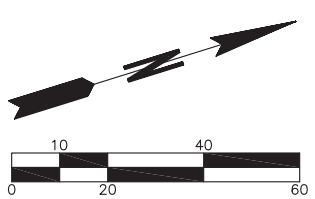

KEY

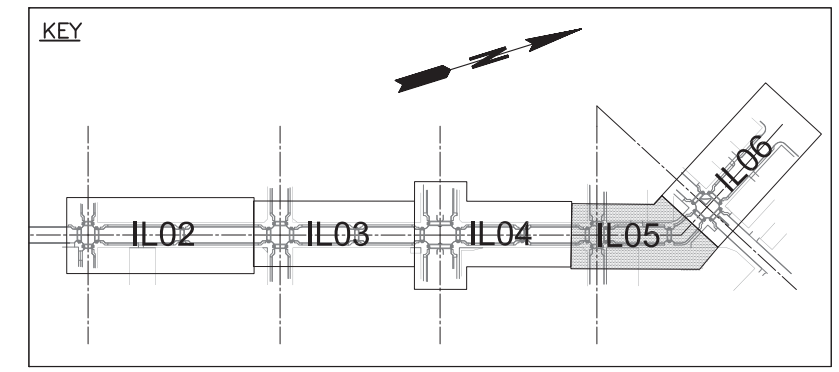

MARK	REVISION DESCRIPTION	BY	APP.	DATE

transpoGROUP
11730 118TH AVENUE NE, SUITE 600
KIRKLAND, WASHINGTON 98034
(TEL) 425 821-3665
(FAX) 425 825-8434

RYAN PETERSON
STATE OF WASHINGTON
47363
REGISTERED
PROFESSIONAL ENGINEER

DRAWN BY KLL
DESIGN BY MMG
CHECK BY SKC
PROJ MGR RWP

CITY OF LONGVIEW

DOWNTOWN STREETSCAPE DESIGN

ILLUMINATION PLAN

DRAWING NO. **IL05**
PROJECT NO. VAVAN-12-108
DATE: 06/06/2014
SHEET NO. 5 OF 10

Last Saved by: Mayrag on: Jun 7, 2014 12:59 PM File: M:\111\111103 Longview Downtown District\Engineering\CAD\Sheets\IL1-IL8.dwg

Copyright © BergerABAM. All Rights Reserved.

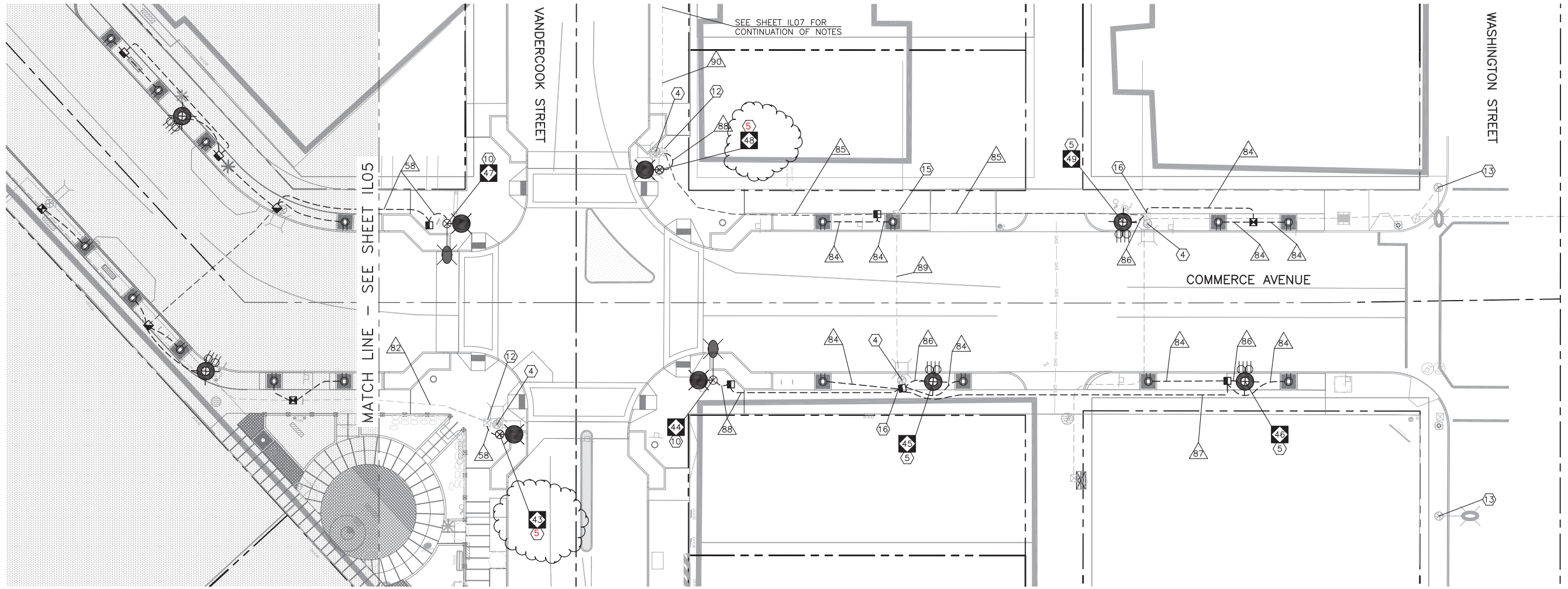

NOTES

1. SEE SHEET IL01 FOR LEGEND, GENERAL NOTES, CONSTRUCTION NOTES, AND BREAKER SCHEDULE.
2. SEE SHEET IL09 AND IL10 FOR WIRING SCHEDULE.

0 10 20 40 60

LUMINAIRE POLE SCHEDULE (CONTINUED)

LUMINAIRE POLE NO.	NORTHING	EASTING	MOUNTING HEIGHT	ARM LENGTH	WATTAGE	SVC #	CKT #	TYPE	COMMENT
43	303898.97	1023760.78	16FT	17¾IN	96	5	5B	ACORN – POST MOUNT BRACKET	
44	303955.04	1023705.96	28FT	8FT	53	5	5A	COBRA	
			16FT	17¾IN	96			ACORN – POST MOUNT BRACKET	
45	304023.13	1023667.10	16FT	N/A	96	5	5A	ACORN – POST TOP	
46	304119.16	1023611.31	16FT	N/A	96	5	5A	ACORN – POST TOP	
47	303845.07	1023705.26	28FT	8FT	53	5	5B	COBRA	
			16FT	17¾IN	96			ACORN – POST MOUNT BRACKET	
48	303900.91	1023650.74	16FT	17¾IN	96	5	5A	ACORN – POST MOUNT BRACKET	
49	304053.04	1023584.02	16FT	N/A	96	5	5A	ACORN – POST TOP	

KEY

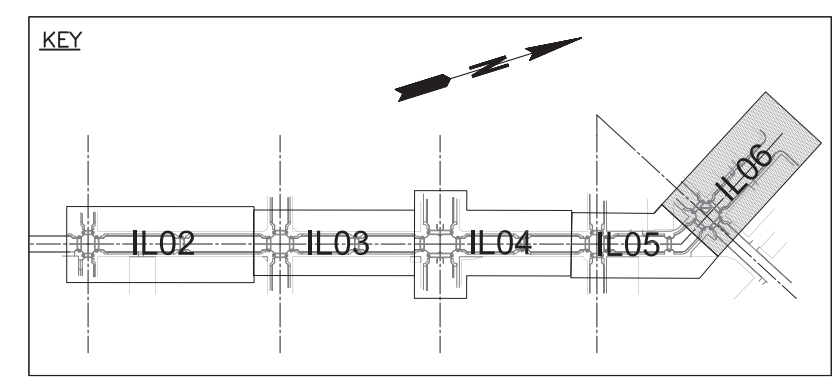

MARK	REVISION DESCRIPTION	BY	APP.	DATE
1	CHANGE POLES 43, 48 TO POST TOP ACORN STYLE	ANB	CMB	6/30/14

transpoGROUP
11730 118TH AVENUE NE, SUITE 600
KIRKLAND, WASHINGTON 98034
(TEL) 425 821-3665
(FAX) 425 825-8434

RYAN PETERSON STATE OF WASHINGTON 47363 REGISTERED PROFESSIONAL ENGINEER

DRAWN BY KLL
DESIGN BY MMG
CHECK BY SKC
PROJ MGR RWP

CITY OF LONGVIEW
DOWNTOWN STREETSCAPE DESIGN

ILLUMINATION PLAN

DRAWING NO. **IL06**
PROJECT NO. VAVAN-12-108
DATE: 06/06/2014
SHEET NO. 6 OF 10

Last Saved by: Mayrag on: Jun 7, 2014 12:59 PM File: M:\111\111103 Longview Downtown District\Engineering\CAD\Sheets\IL1-IL8.dwg

Copyright © BergerABAM. All Rights Reserved.

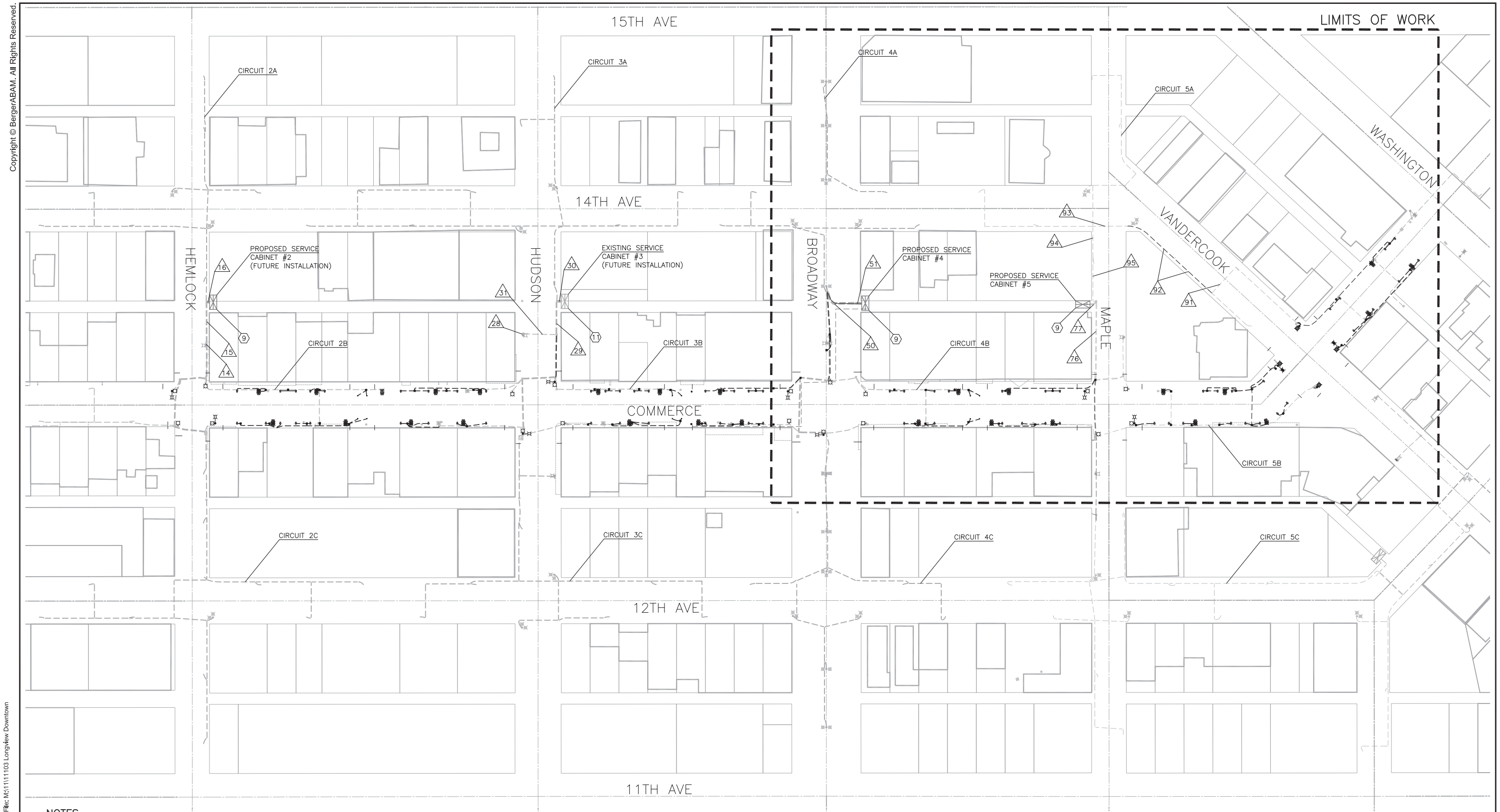

NOTES

1. SEE SHEET IL01 FOR LEGEND, GENERAL NOTES, CONSTRUCTION NOTES, AND BREAKER SCHEDULE.
2. SEE SHEET IL08 FOR WIRING SCHEDULE.
3. CONDUIT RUNS 14, 15, 16 AND 17 ASSOCIATED WITH SERVICE CABINETS 2 AND 3 SHALL BE INSTALLED IN THE FUTURE.

MARK	REVISION DESCRIPTION	BY	APP.	DATE

transpoGROUP
11730 118TH AVENUE NE, SUITE 600
KIRKLAND, WASHINGTON 98034
(TEL) 425 821-3665
(FAX) 425 825-8434

RYAN PETERSON
STATE OF WASHINGTON
47363
REGISTERED
PROFESSIONAL ENGINEER
06-09-14

DRAWN BY KLL
DESIGN BY MMG
CHECK BY SKC
PROJ MGR RWP

CITY OF LONGVIEW

DOWNTOWN STREETSCAPE DESIGN

ILLUMINATION PLAN

DRAWING NO. IL07
PROJECT NO. VAVAN-12-108
DATE: 06/06/2014
SHEET NO. 7 OF 10

Last Saved by: Mayrag on: Jun 9, 2014 11:27 AM File: M:\11\111103 Longview Downtown District\Engineering\CAD\Sheets\IL1-IL8.dwg

Copyright © BergerABAM. All Rights Reserved.

WIRING SCHEDULE – SERVICE 4

WIRE SIZE

NO △	RACEWAY CONDUIT SIZE[D]	ILLUM #2[A] EX.	ILLUM #2[A] NEW	ILLUM #6[A] EX.	ILLUM #6[A] NEW	ILLUM #8[A] EX.	ILLUM #8[A] NEW	ILLUM #10[A] EX.	ILLUM #10[A] NEW	ILLUM #2[B] EX.	ILLUM #2[B] NEW	ILLUM #4[B] EX.	ILLUM #4[B] NEW	ILLUM #6[B] EX.	ILLUM #6[B] NEW	ILLUM #8[B] EX.	ILLUM #8[B] NEW	ILLUM #2[C] EX.	ILLUM #2[C] NEW	ILLUM #4[C] EX.	ILLUM #4[C] NEW	ILLUM #6[C] EX.	ILLUM #6[C] NEW	ILLUM #8[C] EX.	ILLUM #8[C] NEW	SIGNAL #10 EX.	SIGNAL #10 NEW	LOOP #12 EX.	LOOP #12 NEW	INTERCONNECT #12 EX.	INTERCONNECT #12 NEW	PHOTOCELL #14 EX.	PHOTOCELL #14 NEW	PRE-EMPTION 3C EX.	PRE-EMPTION 3C NEW	LOOP 5C EX.	LOOP 5C NEW	SIGNAL 8C EX.	SIGNAL 8C NEW	INTERCONNECT 11C EX.	INTERCONNECT 11C NEW	SIGNAL 11C EX.	SIGNAL 11C NEW	COMMENTS
37	2"–SCH40						2																																					
38	2"–SCH40						2																2																					
39	2"–SCH40														2																													
40	2"–SCH40						2								2								2																					
41	EX 2"							3																										1								1		ASSUME SCH40
42	EX 2"	3					2																																					ASSUME SCH80
43	EX 1½"						2								2								2																					ASSUME SCH40
44	ASSUME EX 1½"							3																																				ASSUME SCH40
45	ASSUME EX 1½"							3																																				ASSUME SCH80
46	EX 1½"							3																														1						ASSUME SCH40
47	EX 2"							3																										1				1						ASSUME SCH40
48	EX 2"	3					2								2								2			2																		ASSUME SCH80
	EX 2"																																					2		1				ASSUME SCH80
49	EX 2"	3																								2														1				ASSUME SCH40
	2"–SCH40						2						2		2								2																					
50	EX 2"	6																								4						3												ASSUME SCH80
	2"–SCH80						2						2		2								2																					
	2"–SCH80	EMPTY (SPARE CONDUIT)[E]																																										
51	EX 2"	6																								4						3												ASSUME SCH40
	2"–SCH40						2						2		2								2																					
	2"–SCH40	EMPTY (SPARE CONDUIT)[E]																																										
52	3"–SCH40	3					2						2		2								2																					
	2"–SCH40	EMPTY (SPARE CONDUIT)[E]																																										
53	EX 2"	3					2								2								2			2																		ASSUME SCH80
	EX 2"																																	1				2		1		1		
54	EX 1½"						2																																					ASSUME SCH40
55	2"–SCH40	EMPTY (SPARE CONDUIT)[E]																																										
56	EX 1½"						2								2								2																					ASSUME SCH80
57	EX 2"						2								2								2															1						ASSUME SCH80

NOTES

1. EXISTING WIRING FOR ALL SIGNAL AND LIGHTING CIRCUITS NOT SHOWN. SHARED CONDUIT RUNS MAY SHOW ADDITIONAL SIGNAL AND/OR ILLUMINATION CONDUCTORS NOT ASSOCIATED WITH CIRCUITS BEING MODIFIED.

WIRING SCHEDULE – SERVICE 5B

WIRE SIZE

NO △	RACEWAY CONDUIT SIZE[D]	ILLUM #2[A] EX.	ILLUM #2[A] NEW	ILLUM #6[A] EX.	ILLUM #6[A] NEW	ILLUM #8[A] EX.	ILLUM #8[A] NEW	ILLUM #10[A] EX.	ILLUM #10[A] NEW	ILLUM #2[B] EX.	ILLUM #2[B] NEW	ILLUM #4[B] EX.	ILLUM #4[B] NEW	ILLUM #6[B] EX.	ILLUM #6[B] NEW	ILLUM #8[B] EX.	ILLUM #8[B] NEW	ILLUM #2[C] EX.	ILLUM #2[C] NEW	ILLUM #4[C] EX.	ILLUM #4[C] NEW	ILLUM #6[C] EX.	ILLUM #6[C] NEW	ILLUM #8[C] EX.	ILLUM #8[C] NEW	SIGNAL #10 EX.	SIGNAL #10 NEW	LOOP #12 EX.	LOOP #12 NEW	INTERCONNECT #12 EX.	INTERCONNECT #12 NEW	PHOTOCELL #14 EX.	PHOTOCELL #14 NEW	PRE-EMPTION 3C EX.	PRE-EMPTION 3C NEW	LOOP 5C EX.	LOOP 5C NEW	SIGNAL 8C EX.	SIGNAL 8C NEW	INTERCONNECT 11C EX.	INTERCONNECT 11C NEW	SIGNAL 11C EX.	SIGNAL 11C NEW	COMMENTS
58	2"–SCH40						2																																					
59	2"–SCH40						2																		2																			
60	2"–SCH40						2														2																							
61	2"–SCH40														2																													
62	2"–SCH40												2																															
63	2"–SCH40						2								2										2																			
64	EX 2"							3																										1								1		ASSUME SCH40
65	EX 2"							3																																		1		ASSUME SCH40
66	EX 1½"						2								2										2																			ASSUME SCH40
67	ASSUME EX 1½"							3																																				ASSUME SCH40
68	2"–SCH40														2																													
69	2"–SCH40												2																															
70	2"–SCH40						2								2										2																			
71	2"–SCH40						2						2								2																							
72	EX 2"						2						2																															ASSUME SCH40
73	EX 2"						2						2		2						2																					1		ASSUME SCH80
74	EX 1½"	EMPTY (SPARE CONDUIT)																																										ASSUME SCH80
	2"–SCH40						2						2								2																							
75	EX 2"						2																																			1		ASSUME SCH80
76	EX 2½"	3					2				2				2						2		2			2														1				ASSUME SCH40
77	EX 2"	3																								2						3												ASSUME SCH40
	3"–SCH40				2		2				4				2				2		2		2																					
78	EX 1½"						2														2																							ASSUME SCH80
79	EX 2"						2						2		2						2																							ASSUME SCH40
80	EX 2"						2						2								2																							ASSUME SCH40
81	EX 1½"						2																																					ASSUME SCH40
82	EX 2"						2																																					ASSUME SCH40
83	EX 2"	3																								2														1				ASSUME SCH80
	EX 2"																																	1								2		ASSUME SCH80
	3"–SCH80						2				2				2						2				2																			

A ILLUMINATION CIRCUIT
B FESTIVAL OUTLET CIRCUIT
C DECORATIVE STREET LIGHTING OUTLET CIRCUIT
D ALL NEW CONDUIT SHALL BE PVC. ALL NEW CONDUIT SHALL INCLUDE A GROUND WIRE EQUAL IN SIZE TO THE LARGEST CONDUCTOR. NEW CONDUCTOR RUNS IN EXISTING CONDUIT SHALL ALSO INCLUDE A GROUND WIRE EQUAL IN SIZE TO THE LARGEST CONDUCTOR.
E FUTURE LIT ART PIECES

MARK	REVISION DESCRIPTION	BY	APP.	DATE

transpoGROUP
11730 118TH AVENUE NE, SUITE 600
KIRKLAND, WASHINGTON 98034
(TEL) 425 821-3665
(FAX) 425 825-8434

RYAN PETERSON STATE OF WASHINGTON 47363 REGISTERED PROFESSIONAL ENGINEER

DRAWN BY KLL
DESIGN BY MMG
CHECK BY SKC
PROJ MGR RWP

CITY OF LONGVIEW
DOWNTOWN STREETSCAPE DESIGN
ILLUMINATION PLAN

DRAWING NO. **IL09**
PROJECT NO. VAVAN-12-108
DATE: 06/06/2014
SHEET NO. 9 OF 10

Last Saved by: Mayrag on: Jun 7, 2014 12:59 PM File: M:\1\11\1103 Longview Downtown District\Engineering\CAD\Sheets\IL1-IL8.dwg

Copyright © BergerABAM. All Rights Reserved.

NOTES

1. EXISTING WIRING FOR ALL SIGNAL AND LIGHTING CIRCUITS NOT SHOWN. SHARED CONDUIT RUNS MAY SHOW ADDITIONAL SIGNAL AND/OR ILLUMINATION CONDUCTORS NOT ASSOCIATED WITH CIRCUITS BEING MODIFIED.

WIRING SCHEDULE – SERVICE 5A

NO	RACEWAY CONDUIT SIZE[D]	WIRE SIZE																																								COMMENTS
		ILLUM #2[A]		ILLUM #6[A]		ILLUM #8[A]		ILLUM #10[A]		ILLUM #2[B]		ILLUM #4[B]		ILLUM #6[B]		ILLUM #8[B]		ILLUM #2[C]		ILLUM #4[C]		ILLUM #6[C]		ILLUM #8[C]		SIGNAL #10		LOOP #12		INTERCONNECT #12		PHOTOCELL #14		PRE-EMPTION 3C		LOOP 5C		SIGNAL 8C		INTERCONNECT 11C		SIGNAL 11C		
		EX.	NEW	EX.	NEW	EX.	NEW	EX.	NEW	EX.	NEW	EX.	NEW	EX.	NEW	EX.	NEW	EX.	NEW	EX.	NEW	EX.	NEW	EX.	NEW	EX.	NEW	EX.	NEW	EX.	NEW	EX.	NEW	EX.	NEW	EX.	NEW	EX.	NEW	EX.	NEW	EX.	
84	2"–SCH40												2																													
85	EX 2"																																			1				2				ASSUME SCH40
	2"–SCH40				2						2								2																							
86	2"–SCH40				2																2																					
87	2"–SCH40				2								2								2																					
88	2"–SCH40				2																																					
89	EX 1½"				2								2								2																					ASSUME SCH80
90	EX 2½"				2						2								2																	1				2				ASSUME SCH40
91	EX 2½"				2						2								2																	1				2				ASSUME SCH80
92	EX 1½"																											5		22														ASSUME SCH40
	2"–SCH40				2						2								2																								
93	EX 3"				2						2								2																	1				2				ASSUME SCH80
94	EX 2"				2						2								2																					1				ASSUME SCH40
95	EX 2"				2						2								2													3								1				ASSUME SCH40

A ILLUMINATION CIRCUIT
B FESTIVAL OUTLET CIRCUIT
C DECORATIVE STREET LIGHTING OUTLET CIRCUIT
D ALL NEW CONDUIT SHALL BE PVC. ALL NEW CONDUIT SHALL INCLUDE A GROUND WIRE EQUAL IN SIZE TO THE LARGEST CONDUCTOR. NEW CONDUCTOR RUNS IN EXISTING CONDUIT SHALL ALSO INCLUDE A GROUND WIRE EQUAL IN SIZE TO THE LARGEST CONDUCTOR.
E FUTURE LIT ART PIECES

MARK	REVISION DESCRIPTION	BY	APP.	DATE

transpoGROUP
11730 118TH AVENUE NE, SUITE 600
KIRKLAND, WASHINGTON 98034
(TEL) 425 821-3665
(FAX) 425 825-8434

RAYAN PETERSON STATE OF WASHINGTON 47363 REGISTERED PROFESSIONAL ENGINEER

DRAWN BY KLL
DESIGN BY MMG
CHECK BY SKC
PROJ MGR RWP

CITY OF LONGVIEW
DOWNTOWN STREETSCAPE DESIGN
ILLUMINATION PLAN

DRAWING NO. **IL10**
PROJECT NO. VAVAN-12-108
DATE: 06/06/2014
SHEET NO. 10 OF 10

Last Saved by: Mayrag on: Jun 7, 2014 12:59 PM File: M:\11111103 Longview Downtown District\Engineering\CAD\Sheets\IL1-IL8.dwg